Notes:

1. DISCHARGE CONNECTION HAS INTEGRATED FLEX HOSE DESIGN.
2. SYSTEM WEIGHT: 2502 LBS
3. INDICATES LIFTING POINTS
4. DENOTES CENTER OF GRAVITY

SYSTEM CONNECTIONS	
ID	DESCRIPTION
D	DISCHARGE LOCATION
C	CONDENSATE DRAIN LOCATION

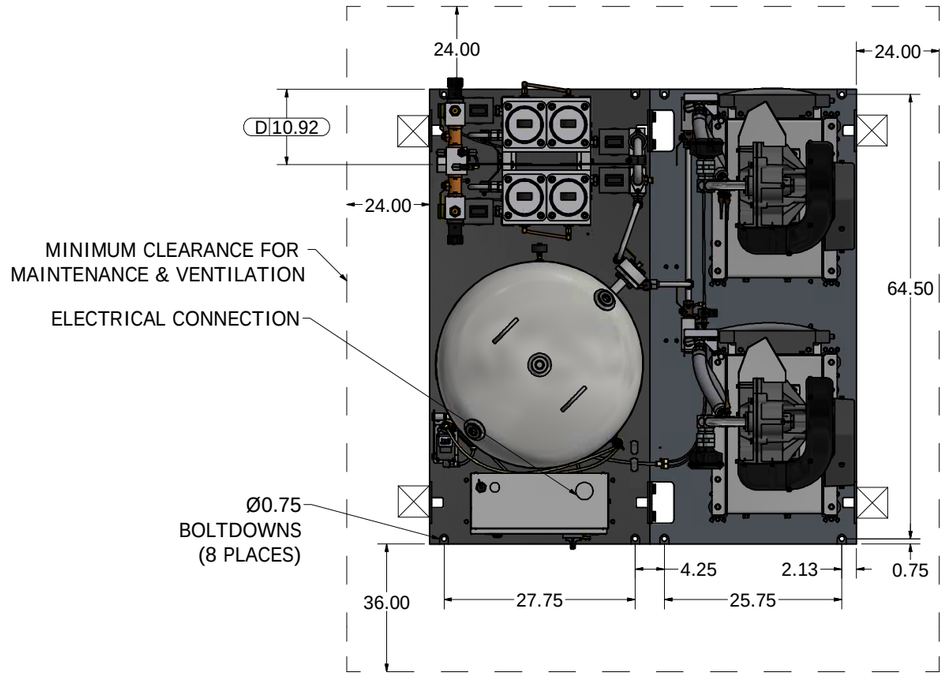

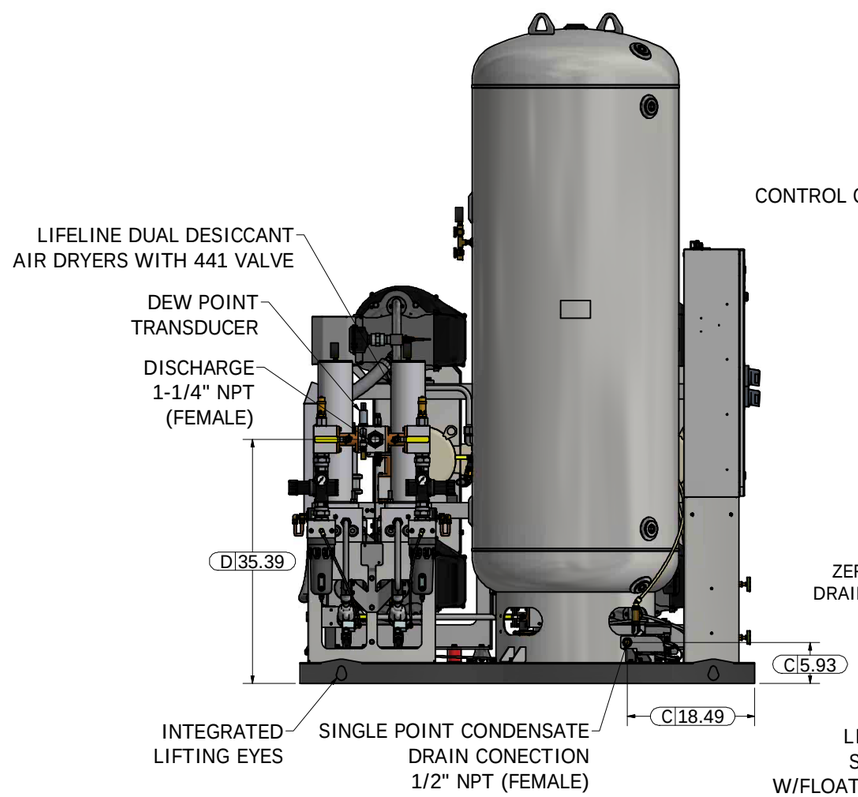

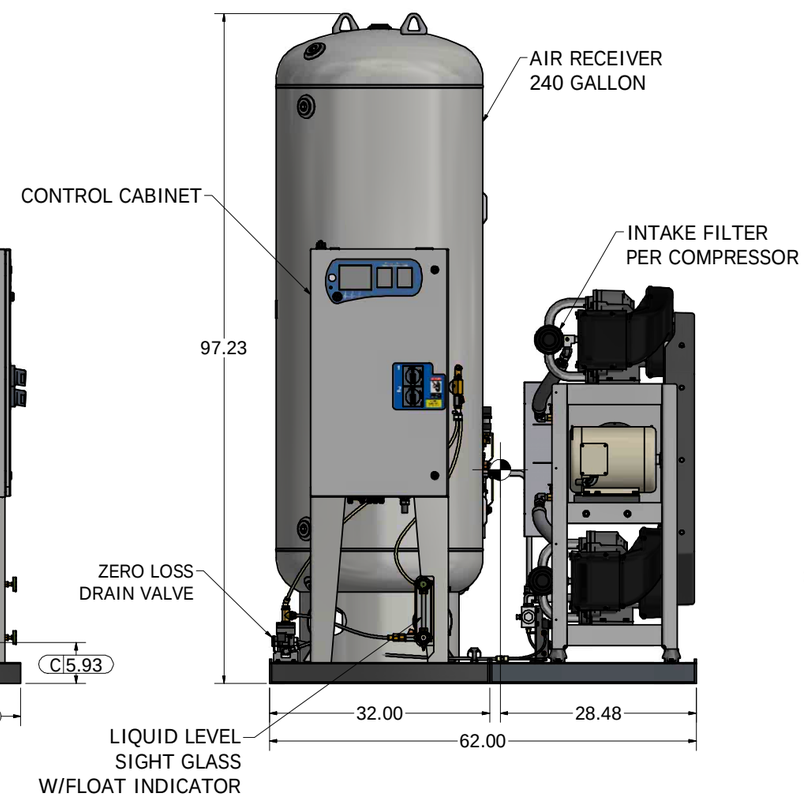

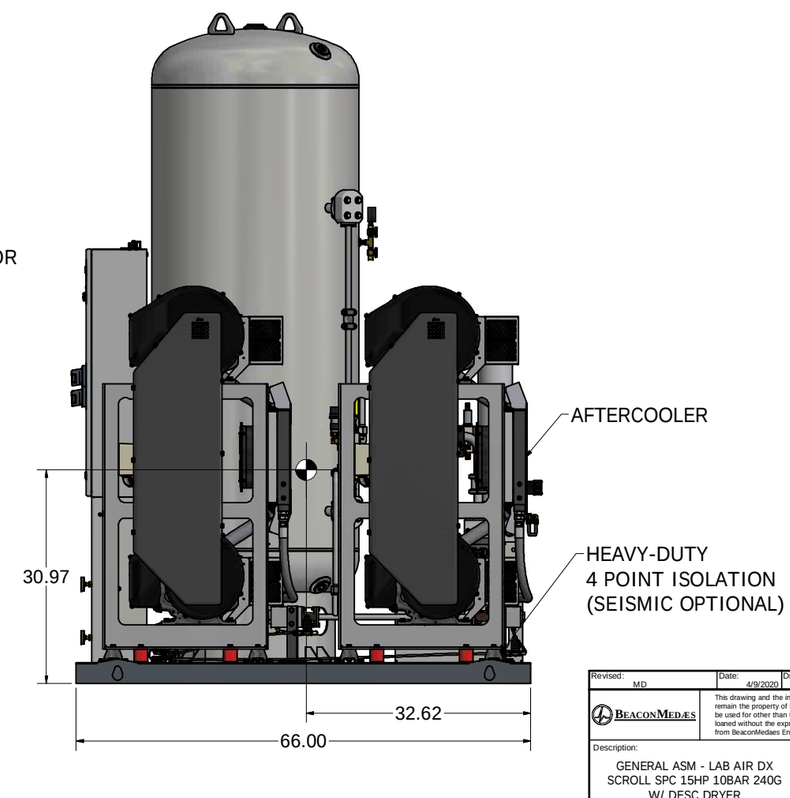

Revised: MD	Date: 4/9/2020	Drawn: GECIA	Date: 3/22/2013
BeaconMedæs	This drawing and the information contained thereon remain the property of BeaconMedaes and may not be used for other than the purpose for which it is loaned without the expressed written permission from BeaconMedaes Engineering.		Scale: D
Description: GENERAL ASM - LAB AIR DX SCROLL SPC 15HP 10BAR 240G W/ DESC DRYER		Part Number: 4107 8544 67	
		DN: HOP200057	Rev: 03
		Sheet 1 of 1	DO NOT SCALE THIS DOCUMENT