Notes:

1. DISCHARGE CONNECTION HAS INTEGRATED FLEX HOSE DESIGN.
2. SYSTEM WEIGHT: 3211 LBS
3. ☒ INDICATES LIFTING POINTS
4. ⊕ DENOTES CENTER OF GRAVITY
5.

SYSTEM CONNECTIONS	
ID	DESCRIPTION
D	DISCHARGE LOCATION
C	CONDENSATE DRAIN LOCATION

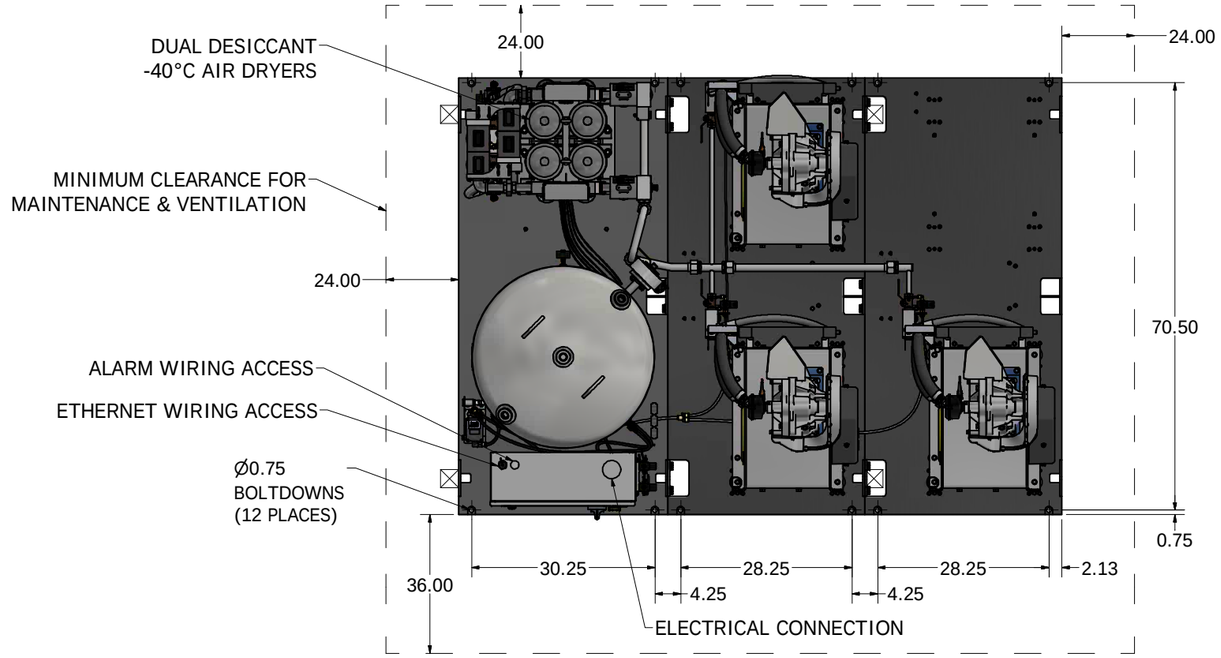

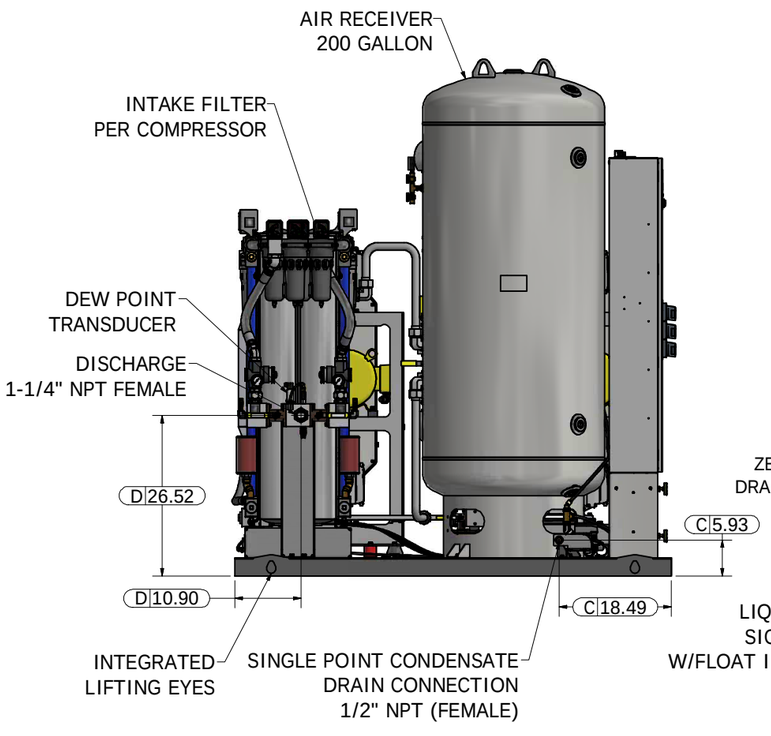

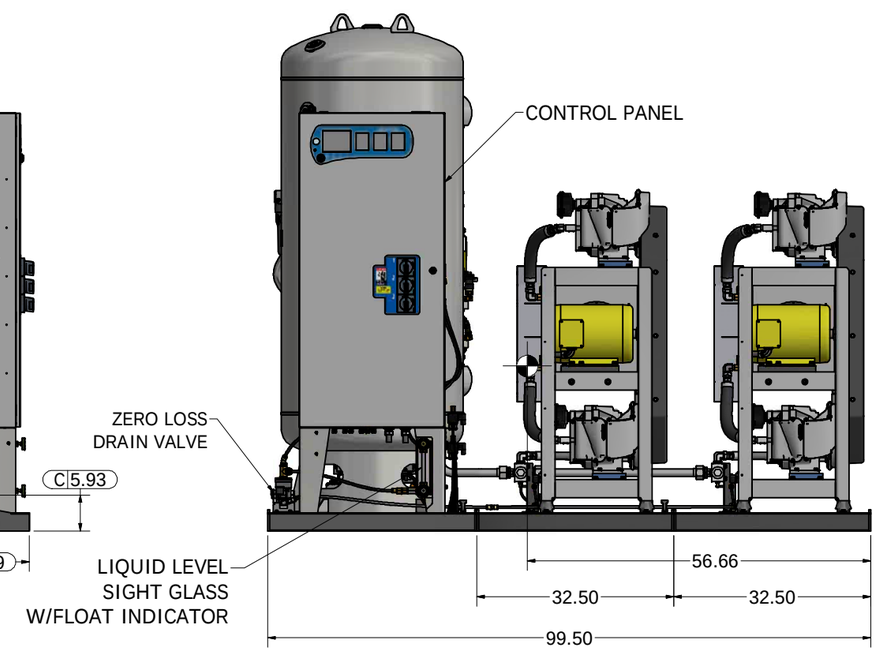

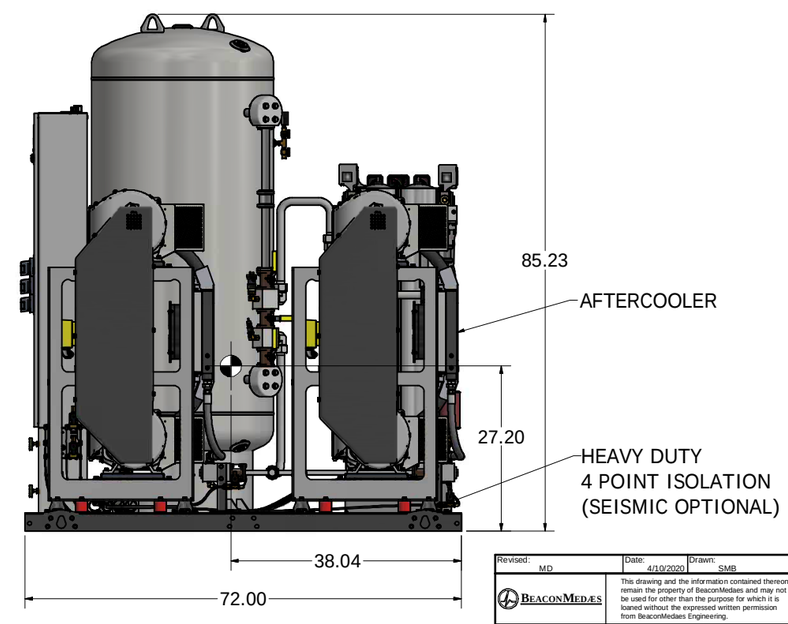

Revised: MD	Date: 4/10/2020	Drawn: SMB	Date: 7/18/2019
BeaconMedæs	This drawing and the information contained thereon remain the property of BeaconMedaes and may not be used for other than the purpose for which it is loaned without the expressed written permission from BeaconMedaes Engineering.		Scale: NTS
			D
Description: DWG GEN ASM TX SCRL LAB 10HP 10BAR 200G -40		Part Number: 4107 8569 98	
		DN: HOP200057	Rev: 01
		Sheet 1 of 1	DO NOT SCALE THIS DOCUMENT