This drawing and the information contained thereon remain the property of BeaconMedæs and may not be used for other than the purpose for which it is loaned without the expressed written permission from BeaconMedæs Engineering.

NOTES:

1. ALL INTERCONNECTING PIPE AND FITTINGS SHALL BE INSTALLED BY THE CONTRACTOR.
2. ALL PIPING SHALL BE INSTALLED IN ACCORDANCE WITH NFPA 99. PIPING LAYOUT IS DIAGRAMMATIC ONLY. FINAL ARRANGEMENT WILL BE SITE SPECIFIC. CONTRACTOR WILL BE RESPONSIBLE FOR FIELD VERIFICATION AND COORDINATING ACTUAL LOCATION WITH ALL OTHER TRADES.
3. CONTRACTOR SHALL VERIFY MOTOR VOLTAGE, PHASE AND AMP RATINGS BEFORE STARTING ELECTRICAL INSTALLATION; AND MAKE CERTAIN THE VOLTAGE SUPPLIED BY THE HOSPITAL IS THE SAME.
4. THE ROOM REQUIRES DEDICATED MECHANICAL VENTILATION WITH AN ALLOWABLE TEMPERATURE VARIANCE OF 40° TO 105°F. (FOR HIGHER AMBIENTS, CONSULT FACTORY)
5. ELECTRICAL POWER SHOULD BE SUPPLIED FROM THE EQUIPMENT SYSTEM BRANCH OF THE ESSENTIAL ELECTRICAL SYSTEM (EMERGENCY POWER).
6. EQUIPMENT, INSTALLATION, AND TESTING OF THE MEDICAL VACUUM SYSTEM SHALL COMPLY WITH NFPA 99 AND ALL STATE AND LOCAL CODES OR ORDINANCES.
7. WIRE LAG PUMP RUNNING ALARM REMOTE CONTACTS IN THIS CONTROL SYSTEM TO MASTER ALARM SYSTEM AS REQUIRED BY NFPA 99.
8. ALL ACCESSORIES, PIPE AND FITTINGS EXCEPT DISCHARGE FLEX HOSE BEYOND INLET AND DISCHARGE PORTS ARE SUPPLIED AND INSTALLED BY OTHERS.
9. WHEN DETERMINING THE TOTAL PIPE LENGTH, ADD ALL THE STRAIGHT LENGTHS OF PIPE TOGETHER IN ADDITION TO THE NUMBER OF ELBOWS TIME THE EFFECTIVE PIPE LENGTH FOR THAT PIPE SIZE. (SEE EQUIVALENT PIPE LENGTH TABLE & EXAMPLE CALCULATION IN THE O&M MANUAL)

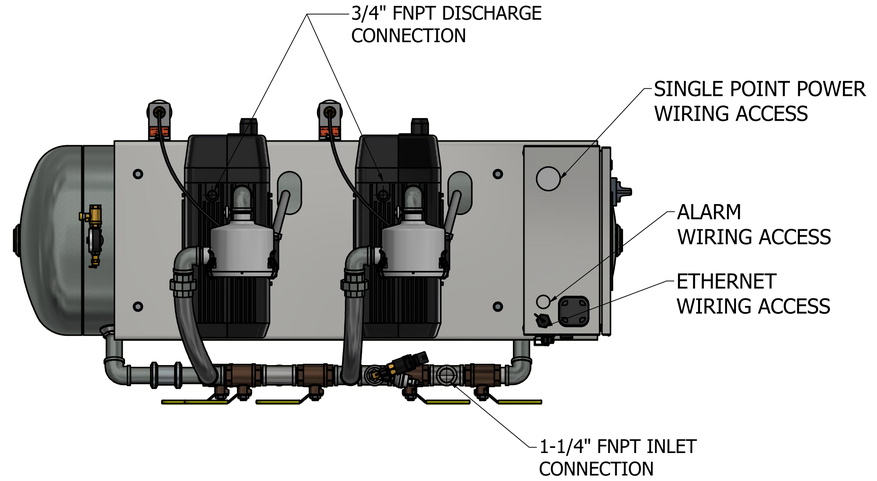

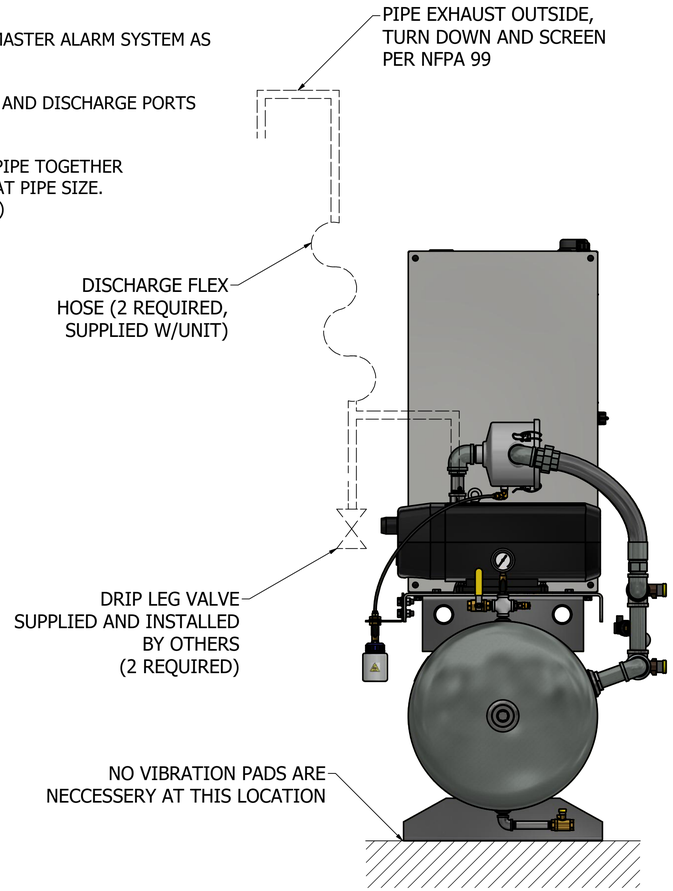

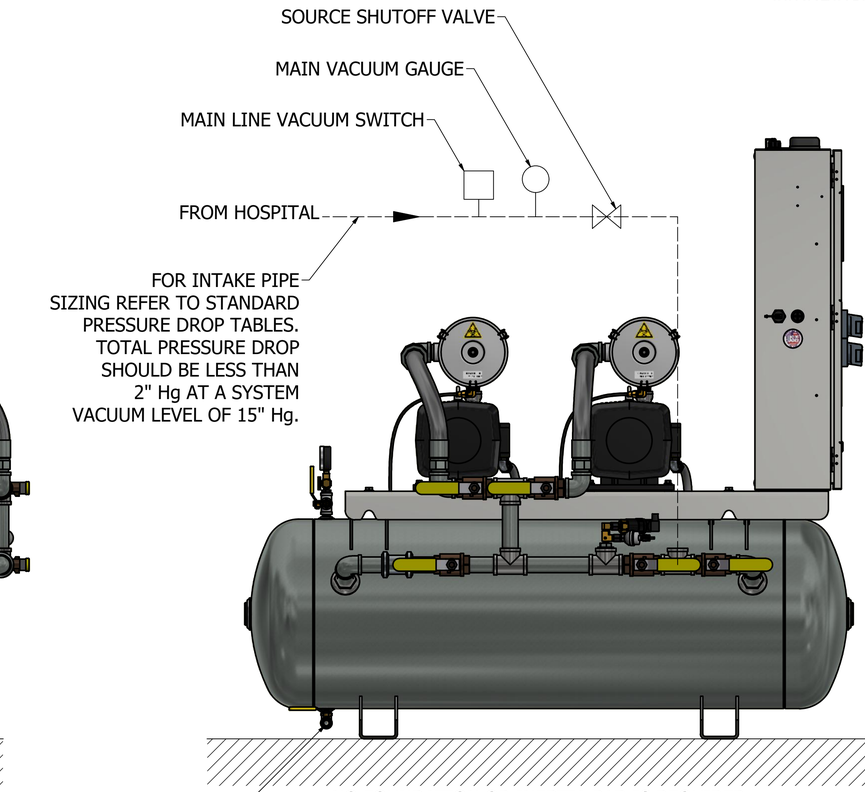

(2HP DX, 80G RECEIVER SHOWN)

--------- FIELD PIPING INLET

========= FIELD PIPING OUTLET

EXHAUST PIPE SIZE TABLE (SEE NOTE 9)			
UNIT SIZE	PIPE LENGTH		
	0' - 150'	151' - 400'	401' - 500'
DPX 1.5 HP	1.00" NPT	1.25" NPT	1.50" NPT
UNIT SIZE	PIPE LENGTH		
	0' - 200'	201' - 400'	401' - 500'
DPX 2 HP	1.25" NPT	1.50" NPT	2.00" NPT

EFFECTIVE PIPE LENGTH TABLE FOR ELBOWS				
PIPE SIZE (IN)	1.0" NPT	1.25" NPT	1.5" NPT	2.0" NPT
EFFECTIVE PIPE LENGTH (FT)	3	3.4	4.0	4.9

Revised: APS	Date: 2/28/2023	Drawn: JOL	Date: 7/5/2015
BeaconMedæs	UNLESS OTHERWISE SPECIFIED ALL DIMENSIONS ARE IN INCHES AND TOLERANCES ARE: XX ±.02, XXX ±.005, XXXX ±.0005, ANGLES ±.5°	Scale: 1/8	D
Description: INSTALLATION DIAGRAM DX 1.5-2HP DRY HTM V 80G TAE		Part Number: 4107 8554 22	
		DN: HOP230844	Rev: 03
		Sheet 1 of 1	DO NOT SCALE THIS DOCUMENT