NOTES:
1. DISCHARGE MUFFLERS WILL BE SHIPPED LOOSE.

2. DX MODULE WEIGHT: 2,306 LBS.
   200G TANK WEIGHT: 658 LBS
   CONTROL PANEL WEIGHT: 229 LBS.

3. ☒ INDICATES LIFTING POINT.

4. ⊕ DENOTES CENTER OF GRAVITY.

SYSTEM CONNECTIONS	
ID	DESCRIPTION
I	INLET LOCATION
D	DISCHARGE LOCATION
C	CONDENSATE DRAIN LOCATION
T	TANK DRAIN LOCATION

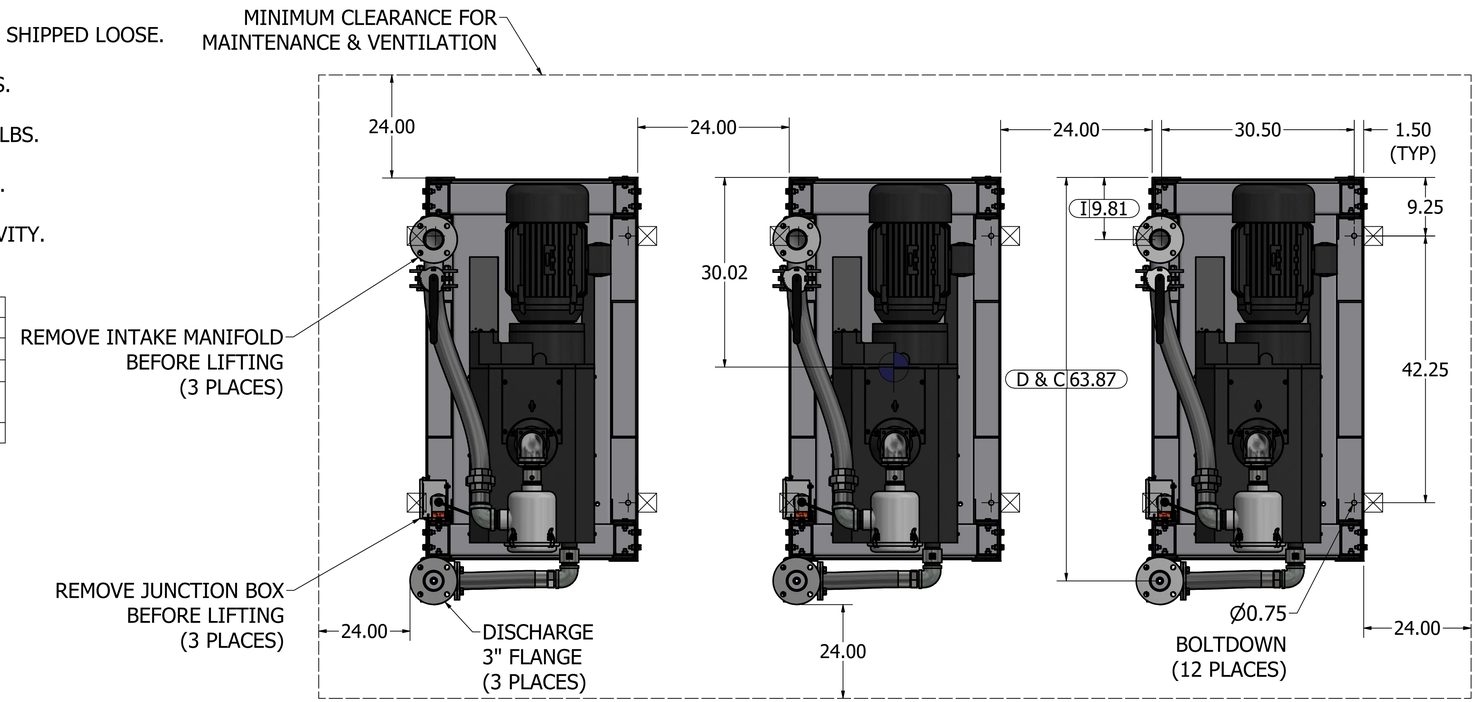

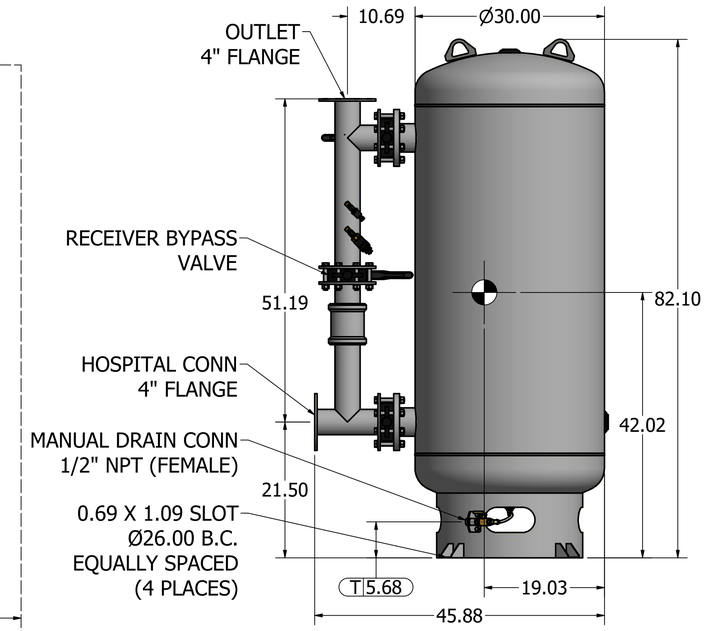

200 GAL VACUUM RECEIVER
4" FLANGED CONNECTIONS
(SCALE 1:12)

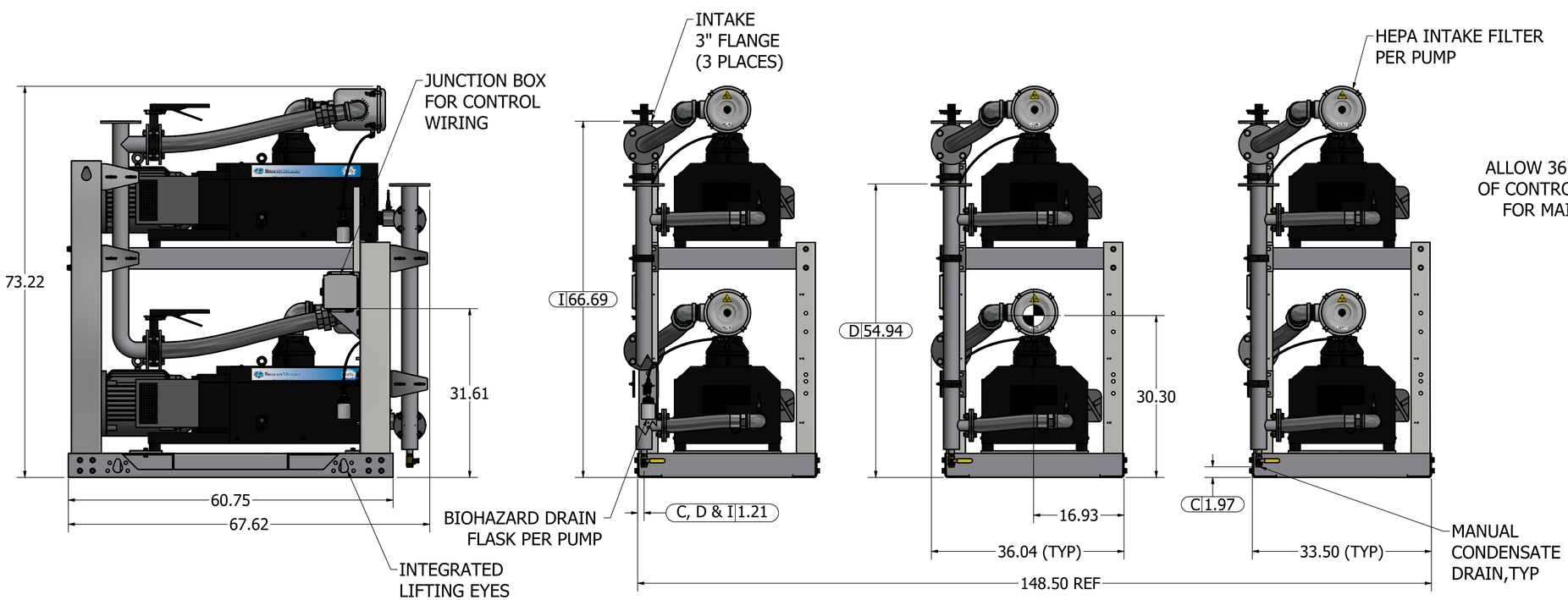

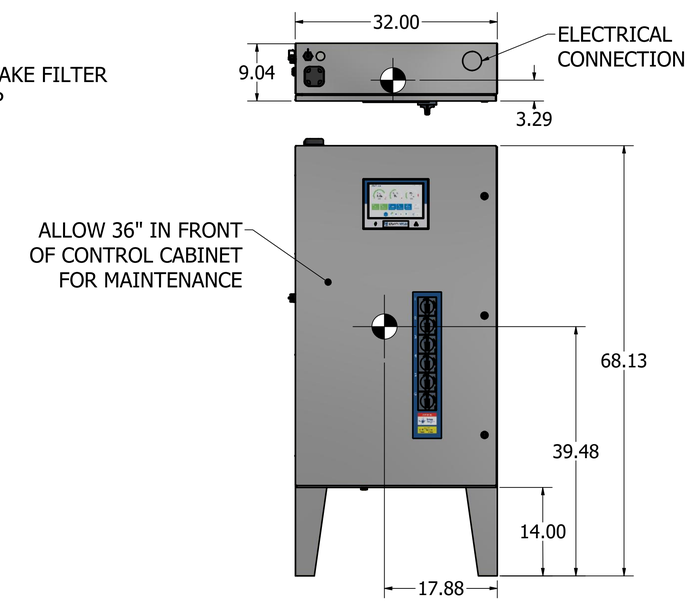

CONTROL CABINET

Revised: a00545201	Date: 4/18/2023	Drawn: JWO	Date: 2/7/2014
BEACONMEDÆS	This drawing and the information contained thereon remain the property of BeaconMedaes and may not be used for other than the purpose for which it is loaned without the expressed written permission from BeaconMedaes Engineering.		Scale: D
Description: GENERAL ASSEMBLY 15HP HX CLAW VAC MOD 200G RECEIVER STANDARD		Part Number: 4107 8549 10	
		DN: HOP230841	Rev: 03
		Sheet 1 of 1	DO NOT SCALE THIS DOCUMENT