Notes:

1. INLET AND DISCHARGE CONNECTIONS HAVE INTEGRATED FLEX HOSE DESIGN.
2. SYSTEM WEIGHT: 1192 LBS
3. ☒ INDICATES LIFTING POINTS
4. ⊕ DENOTES CENTER OF GRAVITY

SYSTEM CONNECTIONS	
ID	DESCRIPTION
I	INLET LOCATION
D	DISCHARGE LOCATION
C	CONDENSATE DRAIN LOCATION

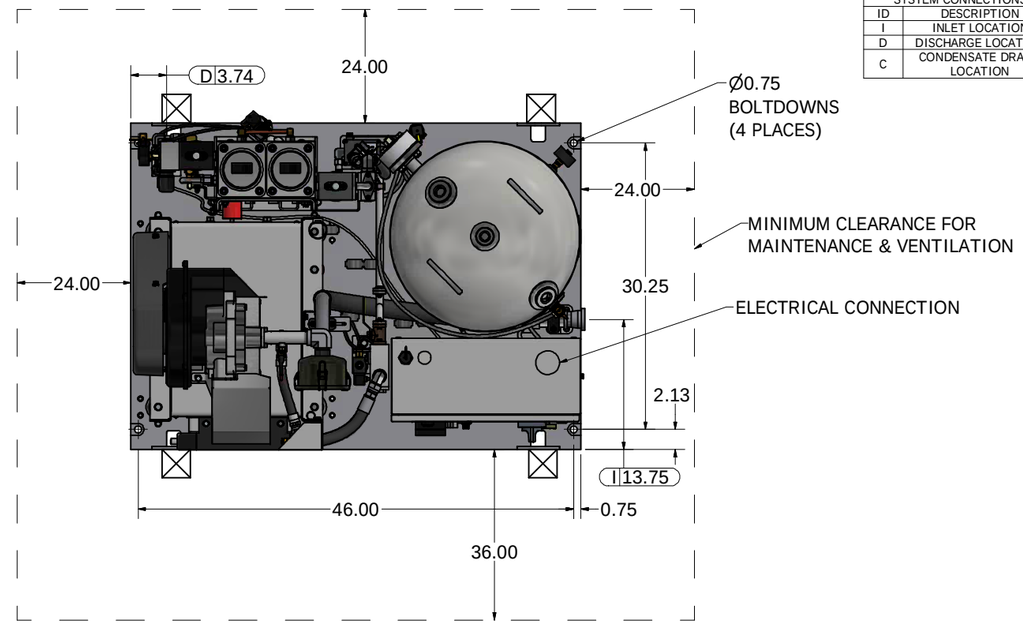

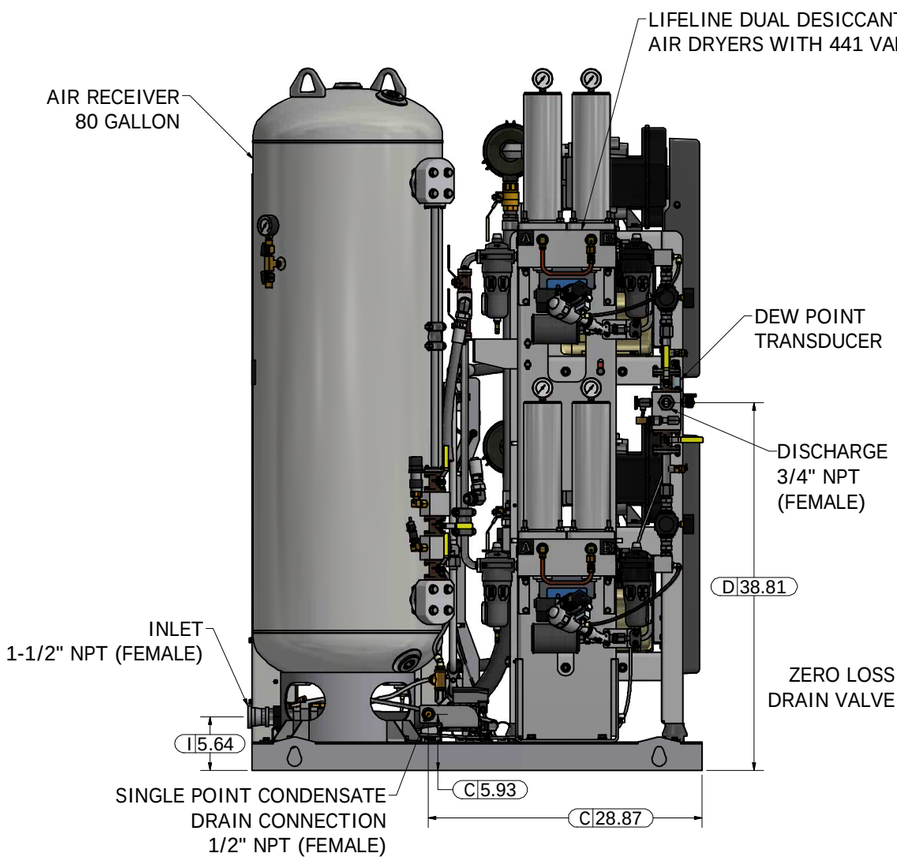

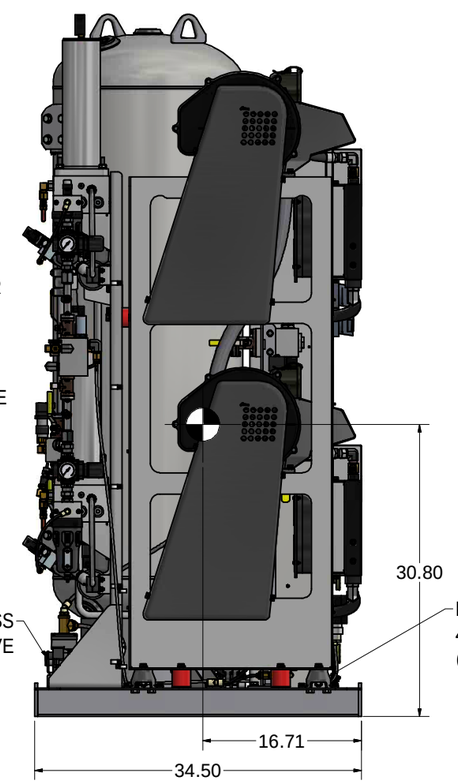

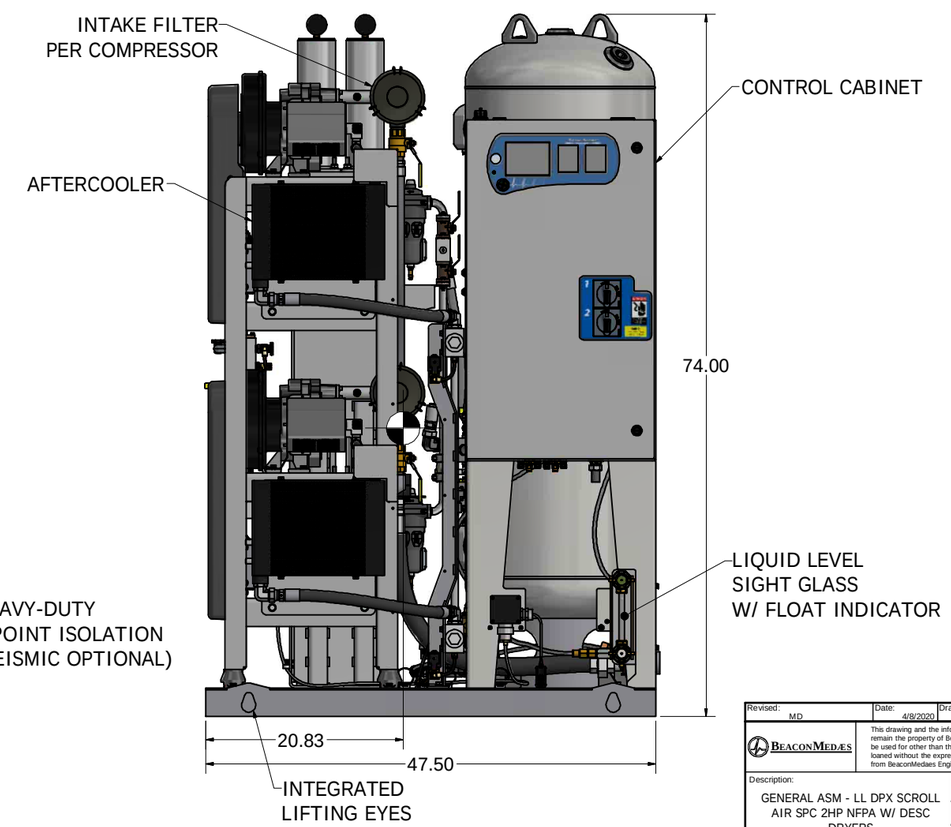

Revised: MD	Date: 4/8/2020	Drawn: JDY	Date: 11/3/2009
BeaconMedaes	This drawing and the information contained thereon remain the property of BeaconMedaes and may not be used for other than the purpose for which it is loaned without the expressed written permission from BeaconMedaes Engineering.		Scale: D
Description: GENERAL ASM - LL DPX SCROLL AIR SPC 2HP NFPA W/ DESC DRYERS		Part Number: 4107 8511 43	
		DN: HOP200057	Rev: 03
		Sheet 1 of 1	DO NOT SCALE THIS DOCUMENT