Notes:

1. INLET AND DISCHARGE CONNECTIONS HAVE INTEGRATED FLEX HOSE DESIGN.
2. SYSTEM WEIGHT: 1970 LBS (INCLUDES FUTURE EXPANSION TOWER)
3. ☒ INDICATES LIFTING POINTS
4. ⊕ DENOTES CENTER OF GRAVITY (INCLUDES FUTURE EXPANSION TOWER)

SYSTEM CONNECTIONS	
ID	DESCRIPTION
I	INLET LOCATION
D	DISCHARGE LOCATION
C	CONDENSATE DRAIN LOCATION

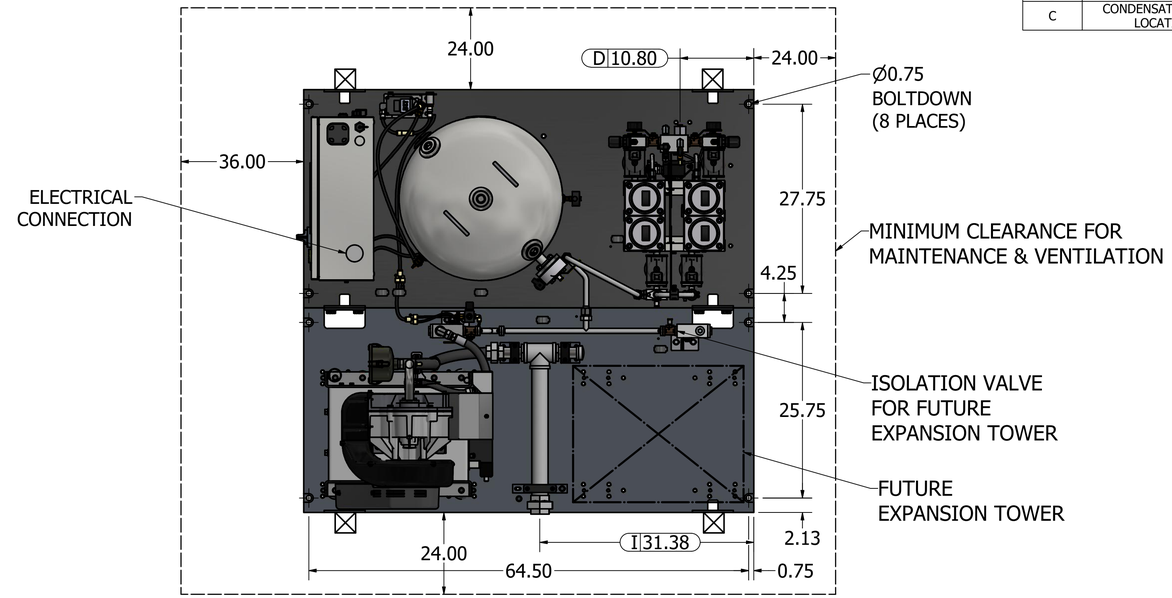

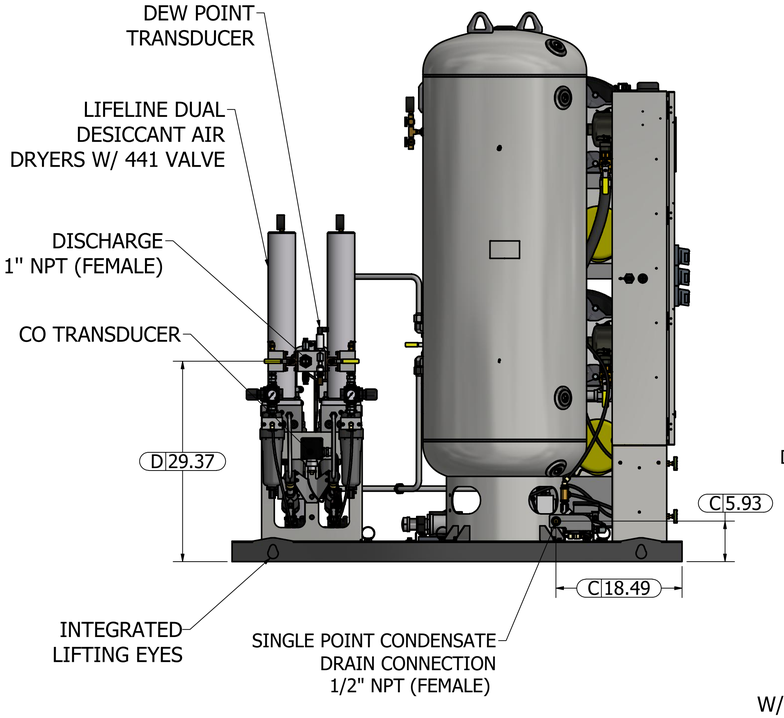

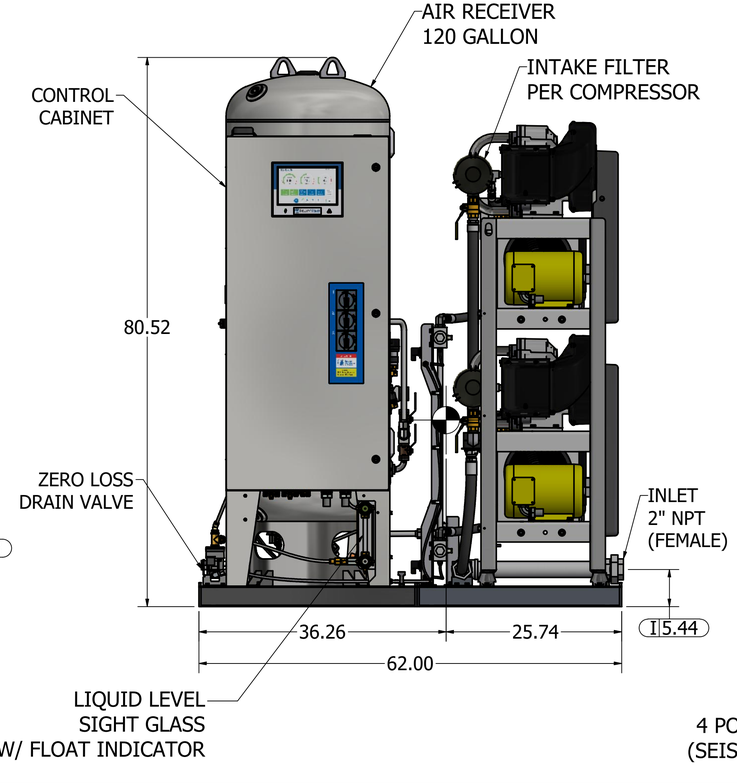

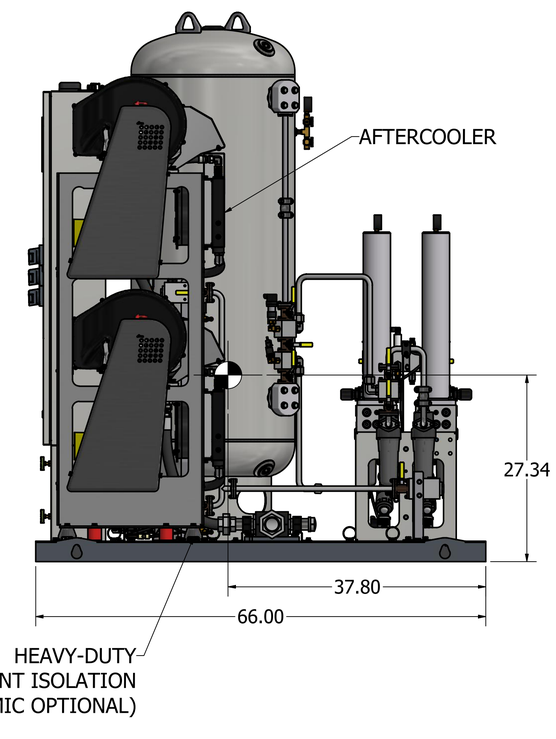

Revised: a00545201	Date: 3/15/2023	Drawn: JDY	Date: 3/26/2010
BeaconMedaes	This drawing and the information contained thereon remain the property of BeaconMedaes and may not be used for other than the purpose for which it is loaned without the expressed written permission from BeaconMedaes Engineering.		Scale: D
Description: GENERAL ASSEMBLY 7.5HP DX-EXP-TX SCROLL SPC 120G RECEIVER NFPA W/ DESC DRYER		Part Number: 4107 8519 20	
		DN: HOP230837	Rev: 04
		Sheet 1 of 1	DO NOT SCALE THIS DOCUMENT