Notes:

1. DISCHARGE MUFFLER WILL BE SHIPPED LOOSE.
2. SYSTEM WEIGHT: 2,904 LBS.
3. ☒ INDICATES LIFTING POINT.
4. ⊕ DENOTES CENTER OF GRAVITY.

SYSTEM CONNECTIONS	
ID	DESCRIPTION
I	INLET LOCATION
D	DISCHARGE LOCATION
C	CONDENSATE DRAIN LOCATION
T	TANK DRAIN LOCATION

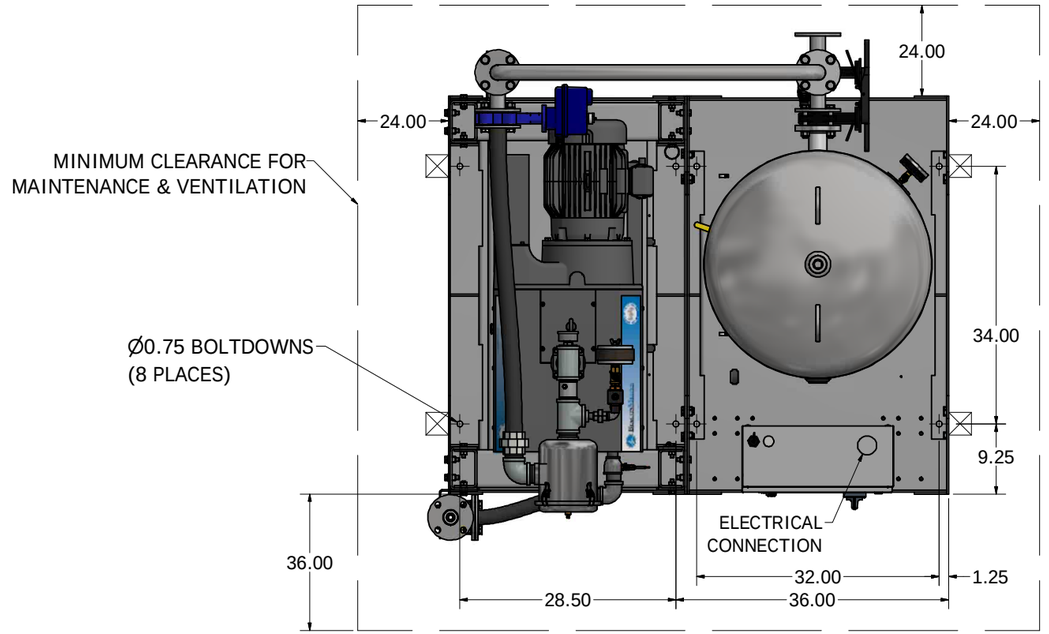

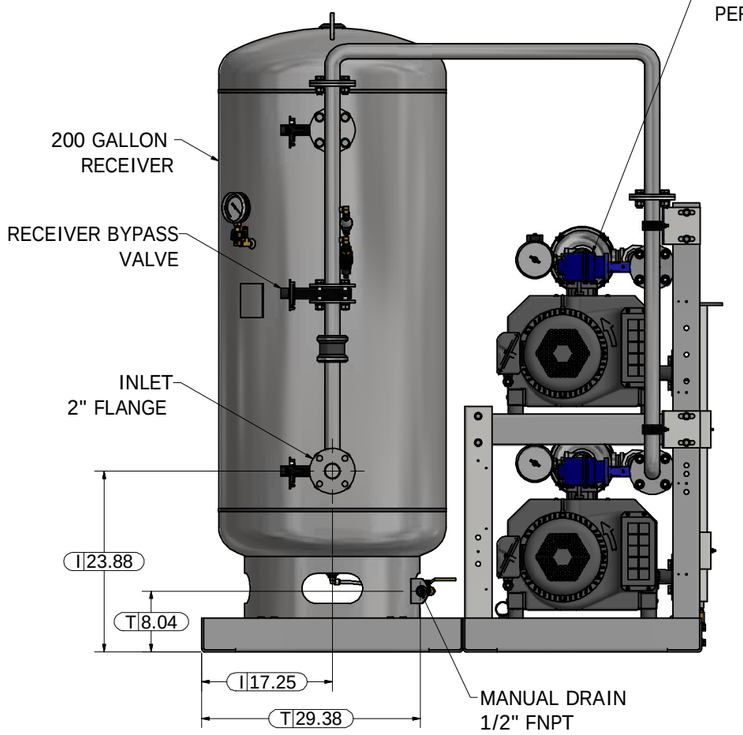

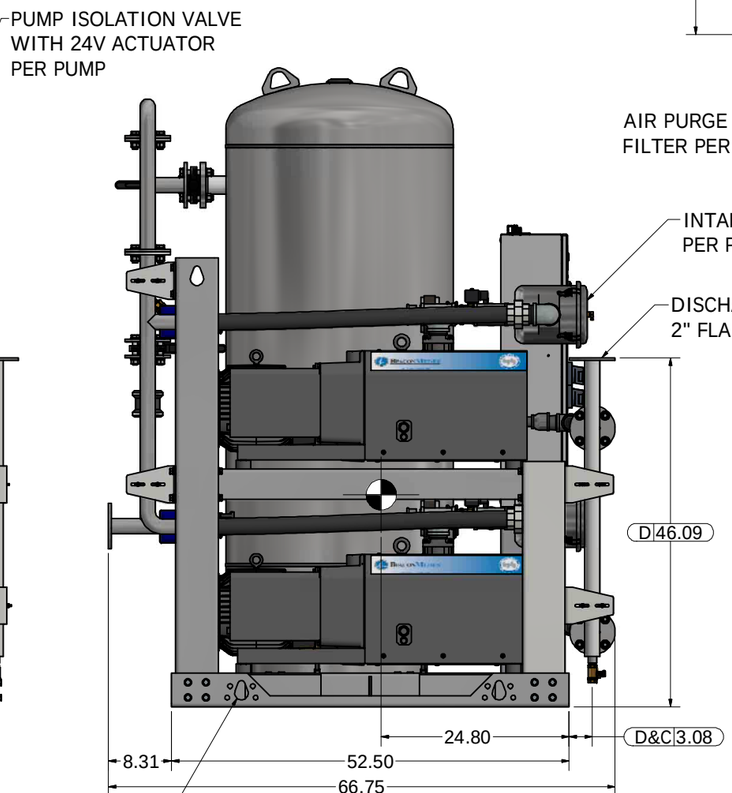

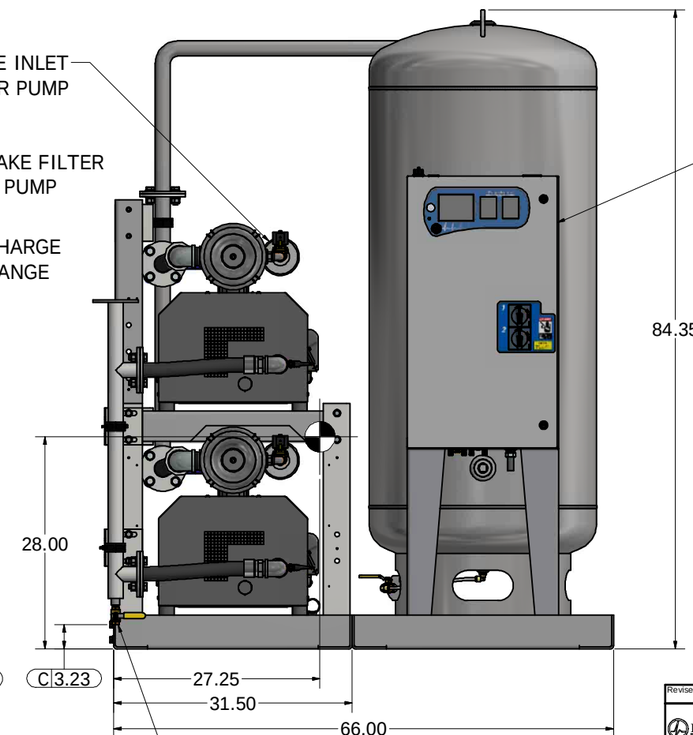

Revised: MDB	Date: 06/17/2019	Drawn: MDB	Date: 08/07/2017

BEACONMEDÆS

This drawing and the information contained thereon remain the property of BeaconMedaes and may not be used for other than the purpose for which it is loaned without the expressed written permission from BeaconMedaes Engineering.

Scale: D

Description: GENERAL ASSEMBLY 6.4HP DX LAB CLAW VAC SPC 200G RECEIVER STANDARD & O2 ASSURED

Part Number: 4107 8562 44

DN: BM190348

Rev: 01

Sheet 1 of 1

DO NOT SCALE THIS DOCUMENT