Notes:

1. DISCHARGE MUFFLER WILL BE SHIPPED LOOSE.
2. SYSTEM WEIGHT: 3,483 LBS.
3. ☒ INDICATES LIFTING POINT.
4. ⊕ DENOTES CENTER OF GRAVITY.

SYSTEM CONNECTIONS	
ID	DESCRIPTION
I	INLET LOCATION
D	DISCHARGE LOCATION
T	TANK DRAIN LOCATION
C	CONDENSATE DRAIN LOCATION

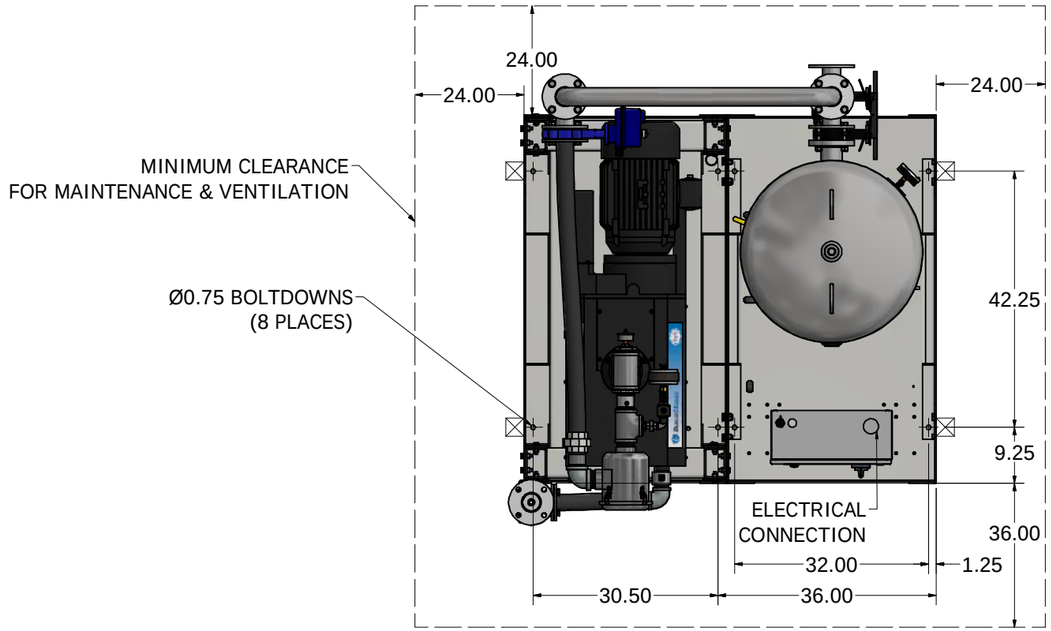

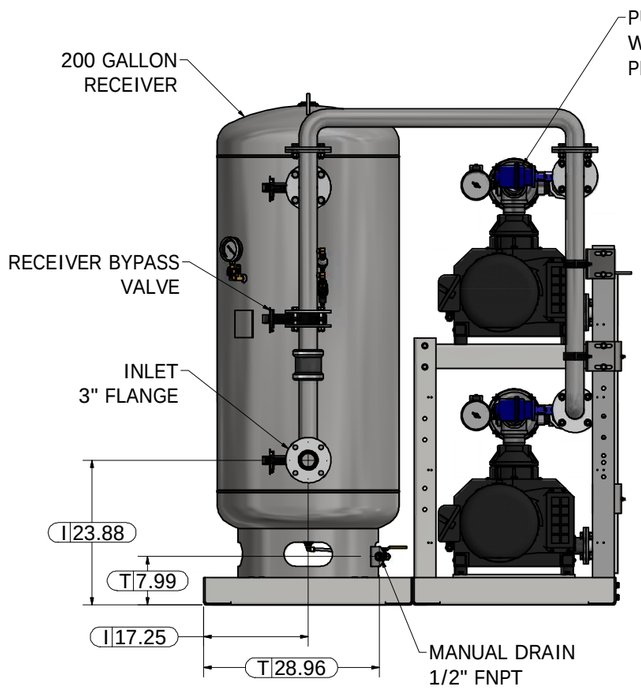

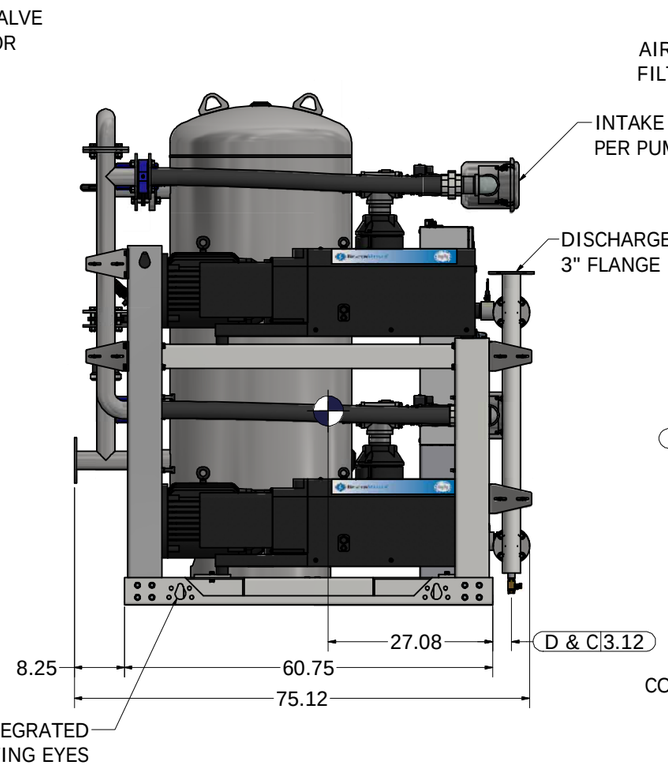

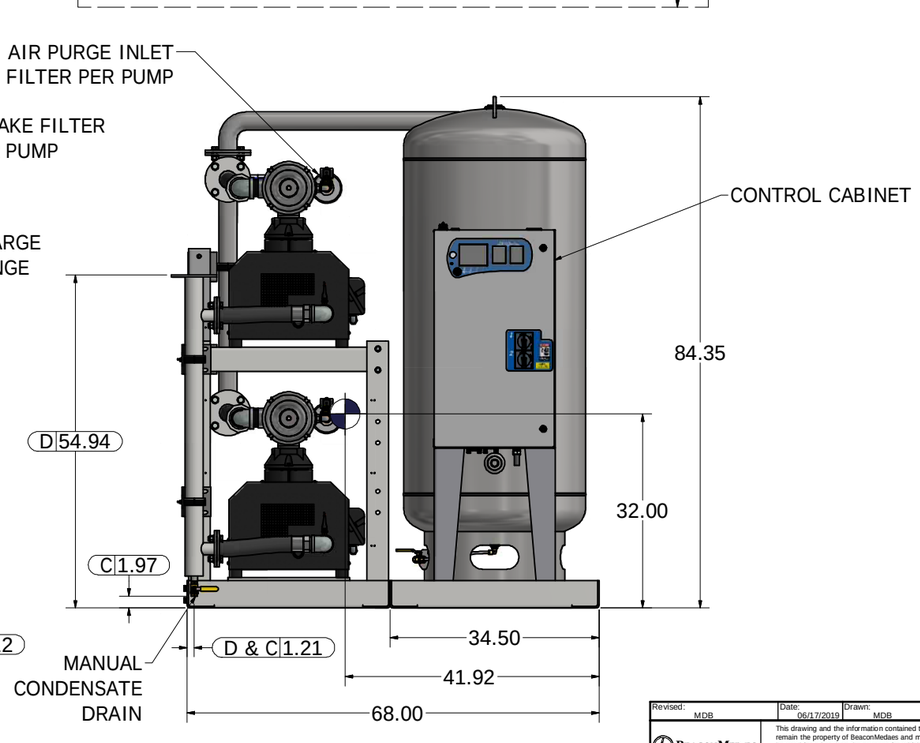

Revised: MDB	Date: 06/17/2019	Drawn: MDB	Date: 11/02/2017

BEACONMEDÆS

This drawing and the information contained thereon remain the property of BeaconMedaes and may not be used for other than the purpose for which it is loaned without the expressed written permission from BeaconMedaes Engineering.

Scale: D

Description: GENERAL ASSEMBLY 15HP DX LAB CLAW VAC SPC 200G RECEIVER

Part Number: 4107 8562 48

DN: BM190348 Rev: 01

Sheet 1 of 1

DO NOT SCALE THIS DOCUMENT