LifeLine® Oil-Free Scroll Medical Air Single Point Connection (SPC) Base Mount

Quadruplex System (7.5 Hp / 5.5 KW)

SPECIFICATION

Single Point Connection (SPC) System Design

The LifeLine® Oil-Less Scroll Medical air package is fully compliant with NFPA 99 and features a common base with single point connections for electrical, intake air, discharge air, and condensate drains. Designed and manufactured with ISO 13485 processes, each system is completely tested before shipment and includes:

- Four oil free scroll compressors and four motors
- Duplex desiccant drying system with purge control
- Integral pre-wired control panel
- Corrosion resistant vertical air receiver

Compressor Module

The compressors are continuous duty rated scroll type, single stage and air-cooled. The compressors have one fixed and one orbiting scroll sealed wtih PTFE tip seals.

- Field replaceable tip seals
- Dust and contamination protection from two part face seal
- Orbiting bearing and pin crank bearings are grease filled
- Heat dissipation maximized by an integral cooling fan
- V-belt driven compressor protected by totally enclosed beltguard
- Fully adjustable motor mounting base to achieve belt tensioning

Compressor Motor

The motor is NEMA rated, open dripproof and operates at 2930 RPM wtih 1.15 service factor suitable for 380V electrical service.

Compressor Assembly

The piped intake manifold includes one inline air filter and isolation valve per compressor and a high inlet vacuum switch to protect the compressors. The compressor discharge assembly includes:

- Integral air-cooled aftercooler with a maximum approach temperature of 15° F (9° C) above ambient and integrated drain trap with automatic solenoid drain valve
- Discharge lines include heat-shielded flex connector, safety relief valve, isolation valve and check valve
- Integral valve per compressor provides load-less starting and rapid air evacuation at shutdown

Isolation System

Four-point heavy duty isolation system for a minimum 95% isolation efficiency fully isolates the compressor / motor tower from the system.

Air Receiver

Corrosion resistant vertical air receiver rated for minimum 150 PSIG design pressure.

The air receiver assembly includes:

- Zero loss electronic drain valve, liquid level gauge glass, safety relief valve, and manual drain valve
- Piped 3-valve bypass assembly with flange-fitted valves
- Pressure gauge

Dryer/Filter/Regulator System

Each desiccant dryer is sized for peak calculated demand and produces a 10° F (-12° C) pressure dew point. Each dryer operates from a demand based purge saving control system featuring repressurization cycles. The dryer assembly includes the following mounted and piped:

- 441™ transfer valve utilizing two sliding ceramic plates with a 5-year warranty
- High efficiency coalescing prefilter rated for 0.01 micron with automatic drain and element change indicator
- Fully duplexed final line particle filters rated for 1 micron with element change indicators
- Duplexed final line regulators and safety relief valves
- Ceramic type dew point sensor with ± 2°F system accuracy
- CO Sensor wtih ± 2 PPM (at 10 PPM) system accuracy

Control System with Graphical Controller

The quadruplex mounted and wired control system provides automatic lead/lag sequencing and automatic alternation of both compressors based on first-on/first-off principle with provision for simultaneous operation if required.

- Circuit breaker disconnects for each motor with external operators
- Full voltage motor starters with overload protection
- 24V control circuit transformers for each motor circuit

The touch screen control features a high definition color display. The screen display and controller functions include:

- System status, runtime hourmeters, system pressure level, dew point level, CO level
- Service alerts
- Visual/audible alarm indications with isolated contacts for all standard remote alarms
- Ethernet connectivity and web page for remote monitoring

Standard Configuration

Model Shown: 7 ½ HP Duplex

1. *Aftercooler with separate cooling fan to provide maximum approach temperature of 15° F above ambient ensuring efficient dryer operation.*
2. *Anodized aluminum blocks and flanged fittings utilized throughout air stream design to reduce leak points.*
3. *Zero-Loss electronic discharge drain to save compressed air and remove moisture efficiently.*
4. *Manifold dryer block design with SAE fittings to reduce potential leak points and to reduce pressure drop losses.*
5. *441® ceramic plate dryer switching valve with 150 million cycle anticipated life to reduce maintenance and downtime costs.*
6. *High efficiency inlet and outlet filters to protect the desiccant beds and medical air stream.*

7. *Mk5 Touch advanced touch screen controller featuring 4.3" high resolution LCD with exceptional clarity and visibility.*
8. *Control panel pre-drilled for power, alarms, and Ethernet connections for easy electrical installation.*
9. *Through the door disconnects for compressors add to safety during service.*
10. *Inlet connection positioned for pipework attachment without stress on system.*
11. *Individual air inlet filter per compressor to protect compressors from incoming debris.*
12. *4-point heavy-duty isolation system for 95% isolation effciency of compressor tower. Further vibration isolation achieved with flex hoses on intake and discharge.*

Elektronikon Mk5 Touch Control System

Touch Screen Control

- Master screen is 4.3” high resolution LCD with 480x272 pixel display for exceptional clarity and visibility
- Easy access navigation icons that enable full access with minimal touches

Display Screen

- Main Screen
  - » Displays the system operating conditions, including System Pressure, Dew Point and CO level
  - » Displays the status of compressors (running, available, off)
  - » Displays the operating mode of the dryers
  - » Displays Normal or Alarm conditions
- Compressor Information
  - » Main screen displays compressor warning
  - » Main screen displays connection status of each compressor with central controller
  - » Single tap on main screen for each compressor shows pressure setpoint, running hours, service hours due
- Alarms and Shutdowns
  - » All System Alarms and Shutdowns displayed with visual indication (Green, Yellow or Red)
  - » Single tap on alarm condition displays cause of alarm
  - » Audible indication for unit Shutdown Alarms

Ethernet Connectivity with Embedded Web Page

- Built-in web server allows remote operator to view system controls and display information

Control Cabinet Safety

- Volt free relay contacts for all standard alarms
- Low voltage (24V) control circuit
- Full voltage motor starters with overload protection
- Circuit breaker disconnects for each compressor
- In case of power failure at source, all remote alarm contacts open in alarm condition.

Redundancy

In unlikely event of Elektronikon becoming disabled, system will continue to function producing medical air with backup pressure switch and dryer operations. In this condition, alarm will activate.

Model Shown: 7.5 HP Quadruplex

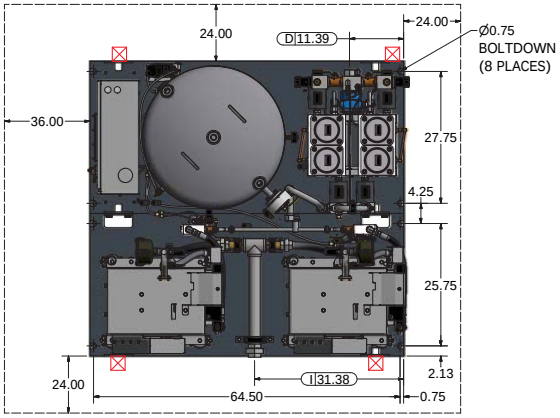

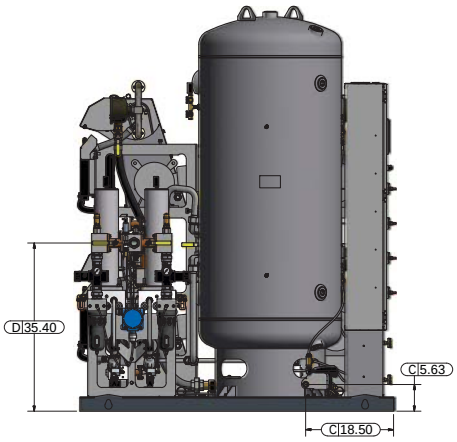

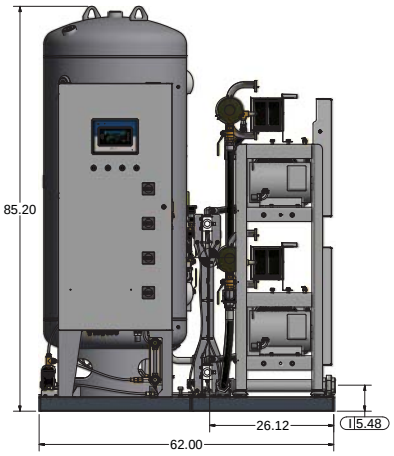

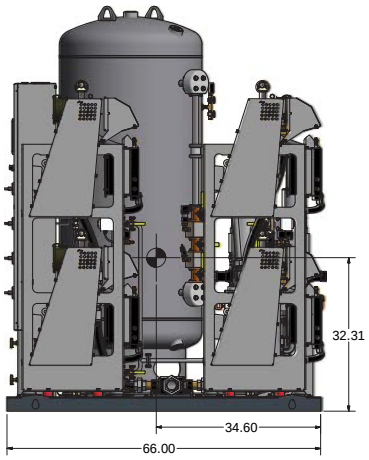

Notes:
- Inlet & discharge flex connections are built into package.
- Allow 900mm in front of control panel for maintenance and ventilation, all other sides require 600mm of clearance.
- Additional drawings/diagrams available for download at www.beaconmedaes.com.

Scroll Compressor Package Specifications[1]								
		System Capacity[2]						
System Model No.	HP / KW	at 109 psig[3] l/m(cfm)	at 50 psig[4] l/m(cfm)	System BTU/HR[5]	Receiver (gallons)	Noise Level[6]	System FLA (380/3/50)	System Weight
WSAS07Q-200V-MQED	(4) 7.5 / 5.5	1827 (64.5)	2141 (75.6)	51,536	200	81	44.4	1162 Kg

Notes:
1. Normal operating conditions at a maximum ambient of 40° C (105° F). Consult factory for higher ambient conditions.
2. All capacities are shown as NFPA system capacities (reserve compressor on standby). System capacity does not account for losses due to dryer purge or other system losses.
3. Unit performance measured according to ISO 1217, Ed. 3, Annex C-1996. Reference conditions: absolute inlet pressure 14.5 psig, intake air temperature 20° C (68° F). Performance measured in Standard Cubic Feet per Minute (SCFM).
4. Capacities are calculated values and shown in Inlet Cubic Feet per Minute (ICFM).
5. All system BTU/HR are shown with reserve compressor on standby.
6. All noise levels are shown in dB(A) with reserve compressor on standby.