Lifeline® "Oil-Less" Claw Medical Vacuum Base Mount Modular Triplex System (5 Hp – 15 Hp)

SPECIFICATION

Modular System Design

The LifeLine® Oil-Less Claw Medical vacuum package is fully compliant with NFPA 99. Each pump module has a common intake connection point and a common discharge connection point. Each module can fit through a standard 34.5" doorway. Designed and manufactured with ISO 13485 processes, each system is completely tested before shipment and includes:

- Three "oil-less" claw rotary vacuum pumps with three motors
- Integral pre-wired control panel
- Vertical air receiver with full-size three-valve bypass system sized for appropriate demand

Vacuum Pump

Each pump is a direct driven, non-contacting claw type, capable of operating continuous duty at the following levels:

- 5.4 Hp at 28.4" Hg (sea level)
- 6.4 and 7.5 Hp at 27" Hg (sea level)
- 8.7 Hp at 25.5" Hg (sea level)
- 10 Hp and 15 Hp at 24" Hg (sea level)

The pumping chamber is oil free. The pump is completely aircooled with no water requirements. Each pump contains:

- Vacuum relief valve
- Check valve to prevent backflow through off-cycle units
- Flexible connector and isolation valve
- High discharge temperature sensor
- Oil drain valve and oil sight glass

Vacuum Pump Motor

Motors are continuous duty, C-face, TEFC, suitable for 230/460 or 208V, 60 hertz, 3-phase electrical service and 380V, 50 hertz, 3-phase electrical service.

HEPA Filter

A HEPA inlet air filter, 0.3 micron, 99.97% efficiency, is mounted before each vacuum pump. A clear, glass collection canister is mounted below each HEPA filter, with quarter turn valve to isolate canister from filter during service. The inlet filter canister contains a bleed valve to relieve vacuum before servicing.

Intake Piping

Each vacuum pump has a factory piped intake with integral flex connector, isolation valve, and check valve. Interconnecting piping consists of powder-coated steel tubing and flanges.

Vacuum Receiver

The vacuum receiver is ASME Code stamped, and rated for a minimum 150 PSIG design pressure. The receiver has a full-size three-valve bypass system to allow for draining of the receiver without interrupting the vacuum service. A manual drain is provided on the receiver.

Exhaust Piping

Each vacuum pump module is factory piped to an exhaust manifold with integral flex connector and drip leg with ball valve and condensate drain. Interconnecting piping consists of powder coated steel tubing and flanges. An exhaust muffler is shipped loose.

TotalAlert Embedded Control System

The triplex mounted and wired TotalAlert Embedded control system is U.L. labeled. The control system provides automatic lead/lag sequencing and automatic alternation of vacuum pumps based on first-on/first-off principle with provision for simultaneous operation if required. Automatic activation of reserve unit, if required, will activate an audible alarm as well as a visual alarm on the display screen.

Additional components include:

- NEMA 12 control panel enclosure
- Circuit breaker disconnects for each motor with external operators
- Full voltage motor starters with overload protection
- 24V control circuit
- 65kAIC SCCR rating

The touch screen controls feature one 5.7" master screen and a 3.5" operating screen for each vacuum pump. Screen displays and functions include:

- Service alerts, runtime hourmeters for each pump, system status, system vacuum level
- Visual/audible alarm indications with isolated contacts for all standard remote alarms
- Event log recording alarms and system activity
- Event log recording service warnings and service history
- Trend graphs for vacuum level, pump operations, and ambient temperature
- Ethernet connectivity and embedded web page for remote monitoring
- Electronic notifications of alarms and warnings
- Integral connectivity to the TotalAlert medical gas network via Ethernet
- Optional BACnet communication with TCP/IP protocol

Installation

The installation of this vacuum technology is limited to 4,000 feet elevation above sea level. For installation of this equipment above this elevation, please contact the factory.

Standard Configuration

15 Hp Triplex

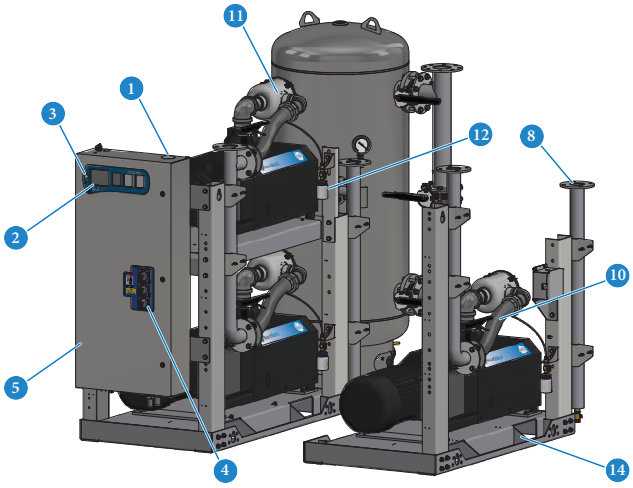

1. *Control panel pre-drilled for power, alarms, and Ethernet connections for easy electrical installation. Ethernet connection on panel top for easy installation.*
2. *TotalAlert Embedded touch screen controls featuring 5.7" master screen and 3.5" operating screens with exceptional clarity and visibility.*
3. *Motion sensor to activate touch screen displays, preserving screen life.*
4. *Through the door disconnects for pumps add to safety during service.*
5. *Control cabinet components achieve rating of 65kAIC SCCR.*
6. *Vacuum switch as backup to vacuum transducer. In case of transducer failure, system operates effectively.*
7. *Full-size 3-valve receiver bypass with flanged valves reduce potential leak points over NPT fittings.*
8. *Discharge manifold with a single point connection to the exhaust piping, with flex hoses factory installed.*
9. *Factory installed exhaust drip leg with ball valve and condensate drain.*
10. *Flex connectors on vacuum inlet and discharge to isolate pump vibration from facility pipeline.*
11. *Individual HEPA air inlet filter per vacuum pump to prevent contaminants from entering vacuum pump, ensuring safety during servicing. Housing bleed valve to remove vacuum for filter replacement.*
12. *Glass collection canister mounted below HEPA filter, with isolation valve to allow for easy changeout.*
13. *Flanges reduce piping connection time between modules.*
14. *Openings in base frame to allow access underneath pumps for pump maintenance.*

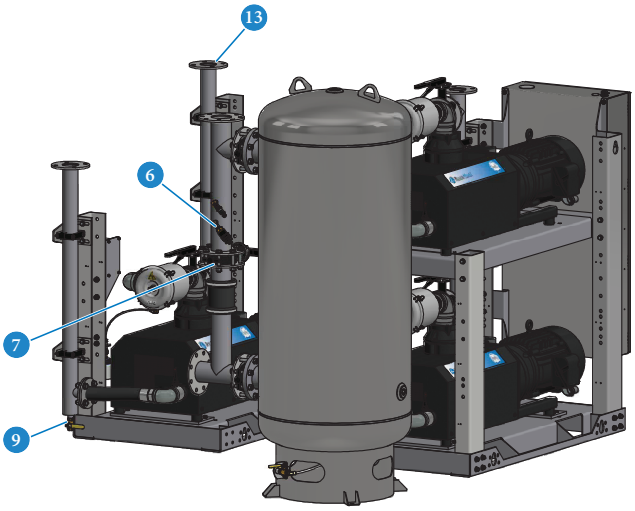

TotalAlert Embedded Control System

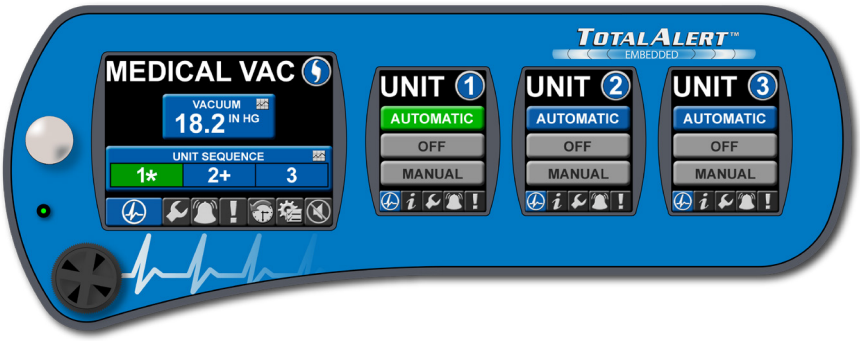

Touch Screen Control

- Master screen is 5.7" high resolution LCD with 640x480 pixel display and Unit screens are 3.5" high resolution LCD with 240x320 pixel display for exceptional clarity and visibility
- Toolbars on all screens with easy access navigation icons that enable full access with minimal touches
- Passive InfraRed (PIR) motion sensor activates screen display (under alarm conditions screen is active continuously)

Ethernet Connectivity with Embedded Web Page

- Built-in web server allows remote operator to view system controls and display information
- Ethernet communication compatible with TotalAlert and TotalAlert2 alarm systems
- Web page provided to show links to other devices on the TotalAlert Embedded network, including alarms and other source equipment
- Electronic notification
  - » Accessible through any SMTP gateway
  - » Allows for remote alerts of alarm and warning conditions
  - » Allows for remote alerts of routine maintenance
- All printed circuit boards have an Ethernet port that allows reprogramming with a standard computer for software updates
- Dual Ethernet configuration with separate Ethernet subnets to separate the facility Ethernet from internal TotalAlert Embedded communications
- TCP/IP protocol for optional BACnet activation – part number 4107 5590 10

Control Cabinet Safety

- Volt free relay contacts for all standard alarms
- Low voltage (24V) control circuit
- Full voltage motor starters with overload protection
- Circuit breaker disconnects for each vacuum pump
- Backup vacuum switch
- In case of power failure at source, all remote alarm contacts open in alarm condition.
- 65kAIC SCCR rating

Redundancy

- In unlikely event of display boards or displays becoming disabled, unit will function normally and activate alarm
- If master board is disabled, system goes to failsafe operation with backup pressure switch
- Each vacuum pump has independent board for control allowing unit to function independently

Master Display Screen (5.7")

- Main Screen
  - » Displays the system operating conditions, including Vacuum level
  - » Displays the vacuum pump sequence, including status of all pumps (running, available, off) and next to start
- Trends & Graphs
  - » Shows measured values of the system operating conditions over a period of time (vacuum level, ambient temperature)
  - » Selectable time periods consist of 60 min, 4 hrs, 24 hrs, and 6 days
- Service
  - » Displays ambient temperature in the room
  - » Maintenance screen shows suggested and required maintenance items with resettable timers
  - » Historical event log records all service activities
- Alarms and Shutdowns
  - » All System Alarms and Shutdowns displayed with visual indication (Green or Red)
  - » Testing mode enables operator to test all alarm events (password protected)
  - » Event History Log records all system event history excluding service/maintenance history
- System Settings
  - » Allows the adjustment of system vacuum operating range (password protected)
  - » Displays pertinent system model information

Unit Screens (3.5") - One per Vacuum Pump

- Main Screen shows the operation mode of the unit along with the automatic or manual mode setting
- Unit status screen displays the running hour meter values
- Pump rotation allows the unit to run for a short period to check pump rotation
- All Unit Alarms and Shutdowns displayed with visual indication (Green or Red)
- Audible indication for unit Shutdown Alarms
- Testing mode enables operator to test all shutdown events (password protected)

SPECIFICATION TABLE

Vacuum System Specifications[1]											
System Model No.	HP	Capacity[2] @19" Hg (scfm)		System[3] BTU/Hr	Receiver (gallons)	Noise[4] Level	System FLA			System Weight (lbs)	
		Pump	System				208V	230V	460V	Vacuum Module[5]	Receiver Module
MOD Triplex - 60 Hz											
VHM05T-120V-T	5.4	38	76	21,989	120	82	43.2	39.7	20.1	1,988	393
VHM05T-200V-T	5.4	38	76	21,989	200	82	43.2	39.7	20.1	1,988	618
VHM05T-240V-T	5.4	38	76	21,989	240	82	43.2	39.7	20.1	1,988	693
VHM06T-200V-T	6.4	52	104	26,061	200	82	54.3	53.5	27.0	2,614	638
VHM06T-240V-T	6.4	52	104	26,061	240	82	54.3	53.5	27.0	2,614	713
VHM07T-200V-T	7.5	65	130	30,133	200	82	74.7	60.7	30.6	2,626	638
VHM07T-240V-T	7.5	65	130	30,133	240	82	74.7	60.7	30.6	2,626	713
VHM08T-200V-T	8.7	77	154	35,426	200	85	77.4	73.9	37.2	2,655	638
VHM08T-240V-T	8.7	77	154	35,426	240	85	77.4	73.9	37.2	2,655	713
VHM10T-200V-T	10	87	174	40,720	200	90	83.7	72.7	36.6	3,435	658
VHM10T-240V-T	10	87	174	40,720	240	90	83.7	72.7	36.6	3,435	733
VHM15T-200V-T	15	128	256	61,080	200	90	123.6	106.9	53.7	3,560	658
VHM15T-240V-T	15	128	256	61,080	240	90	123.6	106.9	53.7	3,560	733
MOD Triplex - 50 Hz							**380V**				
VHM05T-120V-TE	5.4	32	64	21,989	120	82	18.3			1,988	393
VHM05T-200V-TE	5.4	32	64	21,989	200	82	18.3			1,988	618
VHM05T-240V-TE	5.4	32	64	21,989	240	82	18.3			1,988	693
VHM06T-200V-TE	6.4	43	86	26,061	200	82	29.7			2,614	638
VHM06T-240V-TE	6.4	43	86	26,061	240	82	29.7			2,614	713
VHM07T-200V-TE	7.5	54	108	30,133	200	82	32.1			2,626	638
VHM07T-240V-TE	7.5	54	108	30,133	240	82	32.1			2,626	713
VHM08T-200V-TE	8.7	64	128	35,426	200	85	39.9			2,655	638
VHM08T-240V-TE	8.7	64	128	35,426	240	85	39.9			2,655	713
VHM10T-200V-TE	10	72	144	40,720	200	90	43.5			3,435	658
VHM10T-240V-TE	10	72	144	40,720	240	90	43.5			3,435	733
VHM15T-200V-TE	15	103	206	61,080	200	90	45.0			3,560	658
VHM15T-240V-TE	15	103	206	61,080	240	90	45.0			3,560	733

Specification Table Notes:

1. Normal operating conditions at a maximum ambient of 105° F. Consult factory for higher ambient conditions.
2. All capacities are shown as NFPA 99 system capacities (reserve vacuum pump on standby).
3. All system BTU/HR are shown with reserve vacuum pump on standby.
4. All noise levels are shown in dB(A) and reflect reserve pump on standby.
5. Total weight for a triplex module with a triplex control panel (5.4, 6.4, 7.5, and 8.7 Hp systems) or total weight for a duplex module with triplex control panel and simplex module with no control panel (10 and 15 Hp).

Standard Configuration

8.7 Hp Triplex

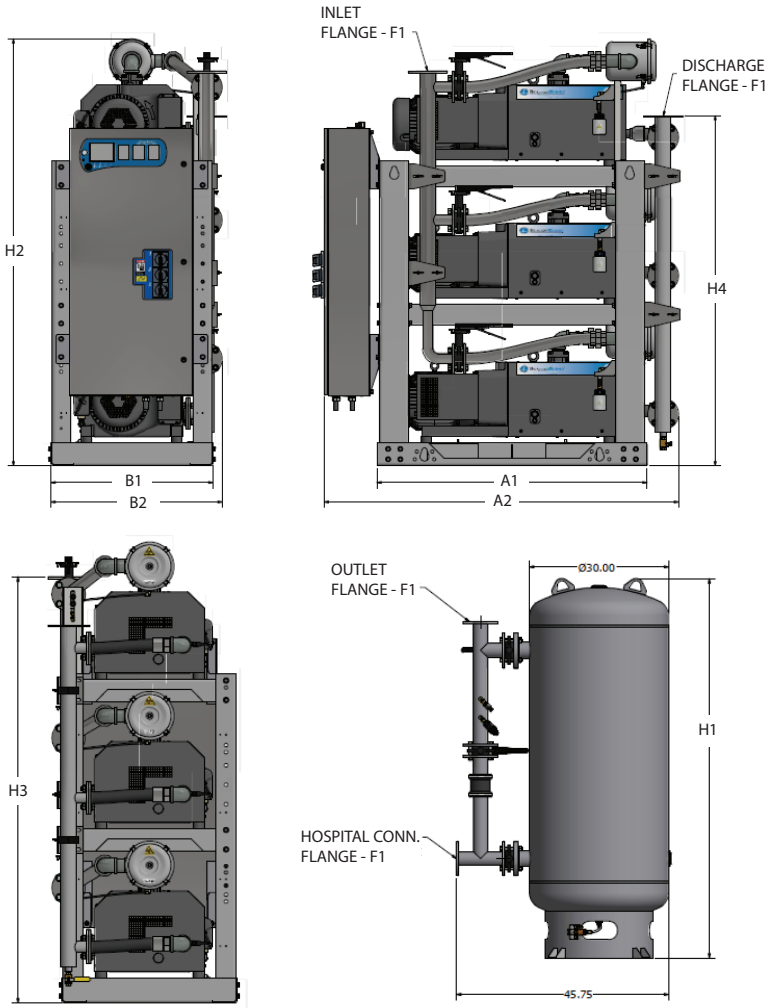

System Model No.	HP	Dimension								
		A1 (Length)	A2 (Length)	B1 (Width)	B2 (Width)	H1 (Height)	H2 (Height)	H3 (Height)	H4 (Height)	F1 (Flange)
VHM05T-120V-T	5.4	47	63.43	28.5	31.29	78.71	81.31	74.63	68.85	2
VHM05T-200V-T	5.4	47	63.43	28.5	31.29	81.97	81.31	74.63	68.85	2
VHM05T-240V-T	5.4	47	63.43	28.5	31.29	93.96	81.31	74.63	68.85	2
VHM06T-200V-T	6.4	52.5	68.85	31.5	33.29	81.97	82.91	76.69	68.38	3
VHM06T-240V-T	6.4	52.5	68.85	31.5	33.29	93.97	82.91	76.69	68.38	3
VHM07T-200V-T	7.5	52.5	68.85	31.5	33.29	81.97	82.91	76.69	68.38	3
VHM07T-240V-T	7.5	52.5	68.85	31.5	33.29	93.97	82.91	76.69	68.38	3
VHM08T-200V-T	8.7	52.5	68.85	31.5	33.29	81.97	82.9	76.69	67.98	3
VHM08T-240V-T	8.7	52.5	68.85	31.5	33.29	93.97	82.9	76.69	67.98	3

Notes:

1. Discharge muffler ships loose.
2. Allow 36 inches in front of control panel for maintenance and ventilation, all other sides require 24 inches of clearance.
3. Additional drawings/diagrams available for download at www.beaconmedaes.com.

Standard Configuration

15 Hp Triplex

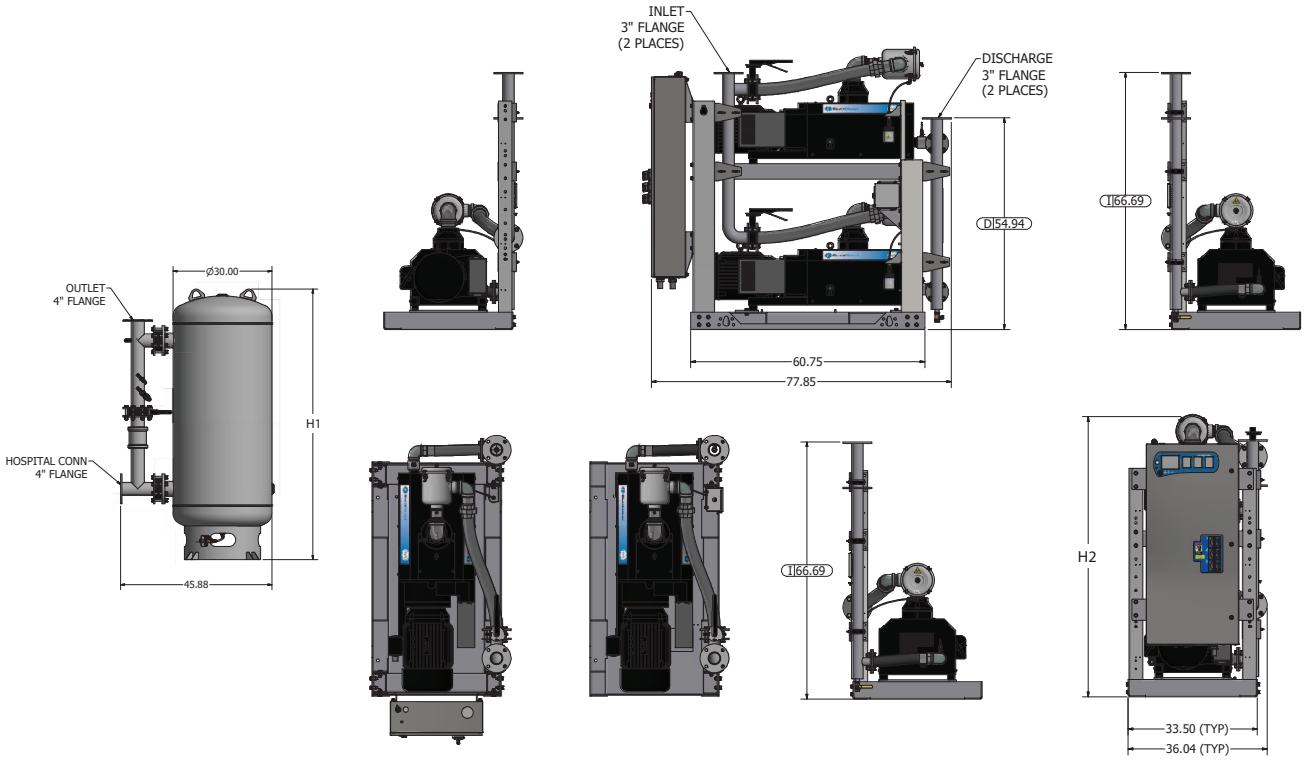

System Model No.	HP	Dimenssion	
		H1 (Height)	H2 (Height)
VHM10T-200V-T	10	82.1	69.81
VHM10T-240V-T	10	94.1	69.81
VHM15T-200V-T	15	82.1	72.63
VHM15T-240V-T	15	94.1	72.63

Notes:

1. Discharge muffler ships loose.
2. Allow 36 inches in front of control panel for maintenance and ventilation, all other sides require 24 inches of clearance.
3. Additional drawings/diagrams available for download at www.beaconmedaes.com.

1059 Paragon Way
Rock Hill, SC 29730
Phone: (803) 817-5600
www.beaconmedaes.com