VerusLab "Oil-Less" Claw Laboratory Vacuum Single Point Connection (SPC) Base Mount TotalAlert Embedded (TAe) Control System Duplex System 6.4 - 8.7 HP

SPECIFICATION

Single Point Connection (SPC) System Design

The Laboratory Oil-Less Claw vacuum package features a common base with single point connections for the electrical panel, intake, and discharge. Each pump and the receiver are connected to a common intake manifold. Each pump is connected to a common discharge manifold. The common base is sized to fit through standard 34.5" doorway. Designed and manufactured with ISO 13485 processes, each system is completely tested before shipment and includes:

- Two "oil-less" claw rotary vacuum pumps with two motors
- Integral pre-wired control panel
- Vertical air receiver with full-size three-valve bypass, sized for appropriate demand

Vacuum Pump

Each pump is a direct driven, non-contacting claw type, capable of operating continuous duty at X" Hg at sea level [where for X, 6.4 HP to 7.5 HP = 25.5" Hg; 8.7 HP = 24" Hg]. The pumping chamber is oil free. The pump is completely air-cooled with no water requirements. Each pump contains:

- 5 micron inlet air filter
- Vacuum relief valve
- Check valve to prevent backflow through off-cycle units
- Flexible connector and isolation valve
- High discharge temperature sensor
- Oil drain valve and oil sight glass
- Each pump is mounted on vibration isolators

Vacuum Pump Motor and Lag Alarm

Motors are continuous duty, C-face, TEFC, 3450 RPM, available in 60 hertz (208V, 230V, or 460V) and 50 hertz (380V), 3-phase electrical service. The lead vacuum pump is factory set to alternate every 10 hours but it is field adjustable between 4 to 24 hours.

This vacuum pump system comes standard with a lag alarm that can be enabled or disabled in the field.

Automatic Purge System

The vacuum pump is equipped with an automatic purge system to flush any gases from the pump to prevent condensation as the pump cools. The purge system incorporates a 24V electric controlled automatic isolation valve and controls. The pump purge time is field adjustable from 5 to 15 minutes with factory setting at 7 minutes. This vacuum pump system requires no air supply.

Vacuum Receiver

The vacuum receiver is ASME Code stamped, and rated for a minimum 150 PSIG design pressure. The receiver has a full-size three-valve bypass system to allow for draining of the receiver without interrupting the vacuum service. A manual drain is provided on the receiver.

Intake Piping

Each vacuum pump has a factory piped intake with integral flex connector, isolation valve with 24V electric actuator, and check valve. Interconnecting piping consists of powder-coated steel tubing and flanges.

Exhaust Piping

Each vacuum pump is factory piped to an exhaust manifold with integral flex connector and drip leg with ball valve and condensate drain. Interconnecting piping consists of powder-coated steel tubing and flanges. An exhaust muffler is shipped loose.

TotalAlert Embedded (TAe) Control System

The TotalAlert Embedded control system is U.L. labeled. The control system provides automatic sequence of pumps actuation optional lag, and automatic adjustable run timer alternation of vacuum pumps based on first-on/first-off principle with provision for simultaneous operation if required. Automatic activation of reserve unit, if required, will activate an audible alarm as well as a visual alarm on the display screen if the lag alarm option is enabled.

Additional components include:
- NEMA 12 control panel enclosure
- Circuit breaker disconnects for each motor with external operators
- Full voltage motor starters with overload protection
- 24V control circuit

The touch screen controls feature one 5.7" master screen and a 3.5" operating screen for each vacuum pump. Screen displays and functions include:
- Service alerts, runtime hourmeters for each pump, system status, system vacuum level
- Visual/audible alarm indications with isolated contacts for all standard remote alarms
- Event log recording alarms and system activity
- Event log recording service warnings and service history
- Trend graphs for vacuum level, pump operations, and ambient temperature
- Ethernet connectivity and embedded web page for remote monitoring
- Electronic notifications of alarms and warnings
- Integral connectivity to the TotalAlert medical gas network via Ethernet

Installation

The installation of this vacuum technology is limited to maximum elevation above sea level:

• 6.4 HP to 7.5 HP	5,000 feet
• 8.7 HP	4,000 feet

For installation of this equipment above this elevation, please contact the factory.

Standard Configuration

6.4 - 8.7 HP Duplex Claw

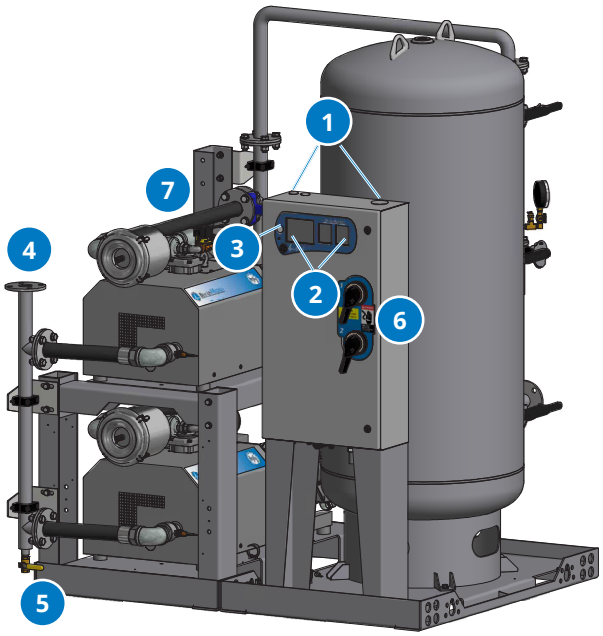

1. *Control panel pre-drilled for power, alarms, and Ethernet connections for easy electrical installation.*
2. *TotalAlert Embedded touch screen controls featuring 5.7" master screen and (2) 3.5" operating screens with exceptional clarity and visibility.*
3. *Motion sensor to activate touch screen displays, preserving screen life.*
4. *Discharge manifold with a single point connection to the exhaust piping, with flex hoses factory installed.*
5. *Factory installed exhaust drip leg with ball valve and condensate drain.*
6. *Through the door disconnects for pumps add to safety during service.*
7. *Flex connectors on vacuum inlet and discharge to isolate pump vibration from facility pipeline.*

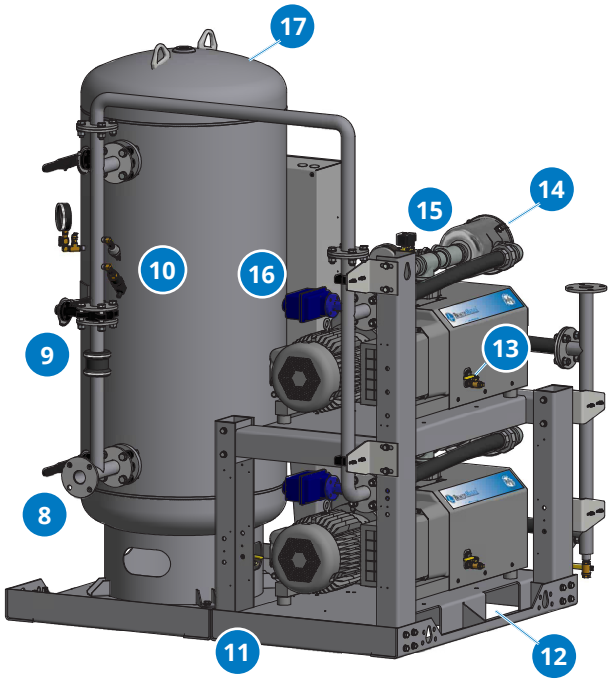

8. *Single point vacuum inlet flange connection and receiver inlet positioned below receiver exit and piping to the pumps - extra protection against liquids/debris entering pumps.*
9. *Full-size 3-valve receiver bypass with flanged valves reduce potential leak points over NPT fittings.*
10. *Vacuum switch as backup to vacuum transducer. In case of transducer failure, system operates effectively.*
11. *Easy to disassemble for transport through doorways and reassemble as Single Point Connection for installation.*
12. *Openings in base frame to allow access underneath pumps for pump maintenance.*
13. *Oil sight glass and filler plug with ease of access for annual oil changes.*
14. *Individual 5 micron air inlet filter per vacuum pump to protect pump from incoming particulates.*
15. *Automatic Purge System (behind inlet filter/ solenoid valve).*
16. *Isolation valve with 24V electric actuator.*
17. *200-gallon vertical receiver.*

TotalAlert Embedded Control System

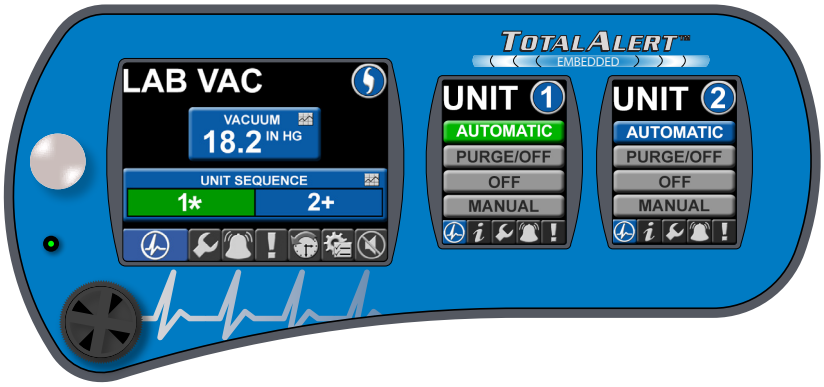

Touch Screen Control

- Master screen is 5.7" high resolution LCD with 640x480 pixel display and Unit screens are 3.5" high resolution LCD with 240x320 pixel display for exceptional clarity and visibility
- Toolbars on all screens with easy access navigation icons that enable full access with minimal touches
- Passive InfraRed (PIR) motion sensor activates screen display (under alarm conditions screen is active continuously)

Ethernet Connectivity with Embedded Web Page

- Built-in web server allows remote operator to view system controls and display information
- Ethernet communication compatible with TotalAlert and TotalAlert2 alarm systems
- Web page provided to show links to other devices on the TotalAlert Embedded network, including alarms and other source equipment
- Electronic notification
  - » Accessible through any SMTP gateway
  - » Allows for remote alerts of alarm and warning conditions
  - » Allows for remote alerts of routine maintenance
- All printed circuit boards have an Ethernet port that allows reprogramming with a standard computer for software updates
- Dual Ethernet configuration with separate Ethernet subnets to separate the facility Ethernet from internal TotalAlert Embedded communications

Control Cabinet Safety

- Volt free relay contacts for all standard alarms
- Low voltage (24V) control circuit
- Full voltage motor starters with overload protection
- Circuit breaker disconnects for each vacuum pump
- Backup vacuum switch
- In case of power failure at source, all remote alarm contacts open in alarm condition.
- NEMA 12 control panel enclosure

Redundancy

- In unlikely event of display boards or displays becoming disabled, unit will function normally and activate alarm
- If master board is disabled, system goes to failsafe operation with backup pressure switch
- Each vacuum pump has independent board for control allowing unit to function independently

Master Display Screen (5.7")

- Main Screen
  - » Displays the system operating conditions, including Vacuum level
  - » Displays the vacuum pump sequence, including status of all pumps (running, available, off) and next to start
- Trends & Graphs
  - » Shows measured values of the system operating conditions over a period of time (vacuum level, ambient temperature)
  - » Selectable time periods consist of 60 min, 4 hrs, 24 hrs, and 6 days
- Service
  - » Displays ambient temperature in the room
  - » Maintenance screen shows suggested and required maintenance items with resettable timers
  - » Historical event log records all service activities
  - » Service alerts, runtime hourmeters for each pump, system status, system vacuum level and purge mode
- Alarms and Shutdowns
  - » All System Alarms and Shutdowns displayed with visual indication (Green or Red)
  - » Testing mode enables operator to test all alarm events (password protected)
- Event History Log records all system event history excluding service/maintenance history
- System Settings
  - » Allows the adjustment of system vacuum operating range (password protected)
  - » Displays pertinent system model information
  - » Alarm with isolated dry contact for all standard remote alarms
  - » Alarm shutdowns show units and direct user to individual operating screens

Unit Screens (3.5") - One per Vacuum Pump

- Main Screen shows the operation mode of the unit along with the automatic, manual, and purge mode settings
- Unit status screen displays the running hour meter values
- Pump rotation allows the unit to run for a short period to check pump rotation
- All Unit Alarms and Shutdowns displayed with visual indication (Green or Red)
- Audible indication for unit Shutdown Alarms
- Testing mode enables operator to test all shutdown events (password protected)

Standard Configuration

6.4 - 8.7 HP Duplex Claw

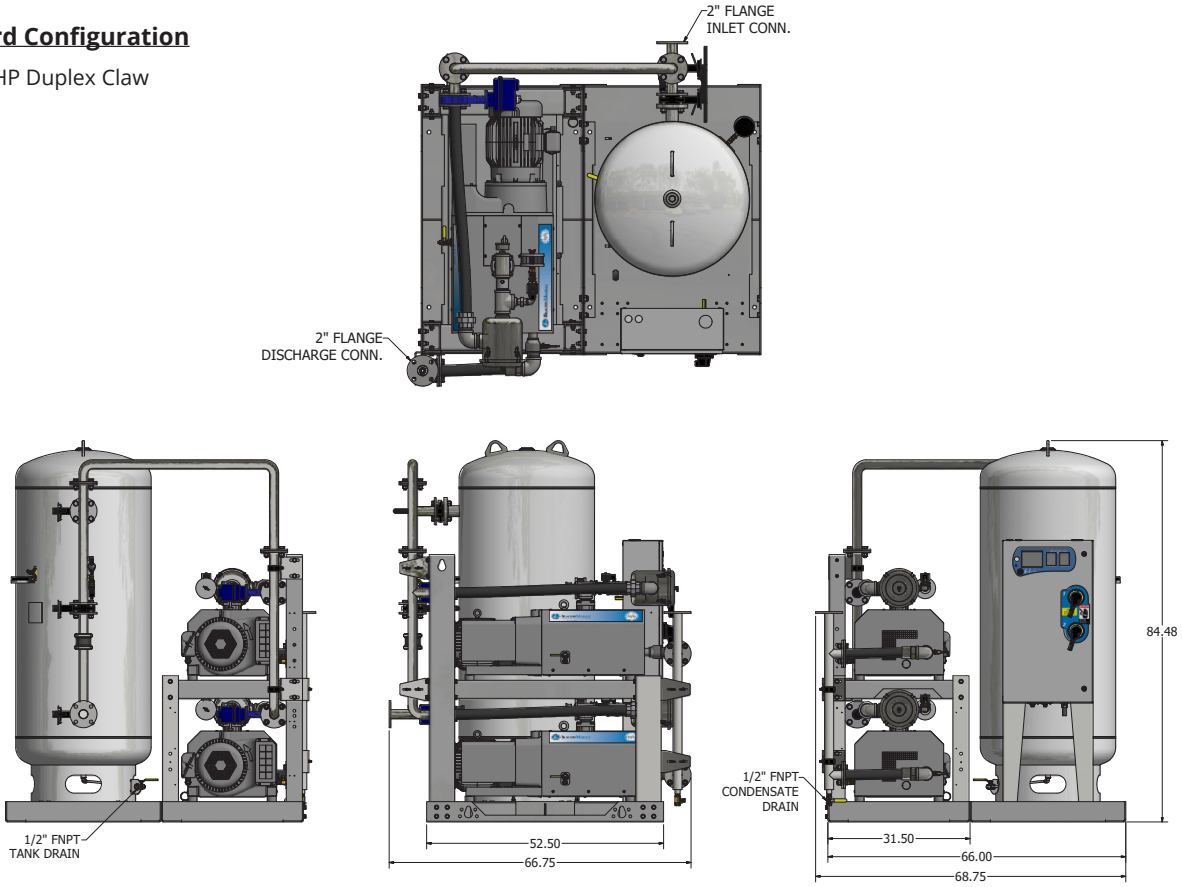

Notes:
- Discharge muffler ships loose
- Allow 36 inches in front of control panel for maintenance and ventilation, all other sides require 24 inches of clearance.
- Additional drawings/diagrams available for download at www.beaconmedaes.com.

Vacuum System Specifications[1] @ Sea Level

System Model No.	Hz	HP	Nominal Pumping Speed (acfm/pump)	Capacity[2] @ 19" HgV (scfm/ system)	Capacity[2] @ 25" HgV (scfm/ system)	End Pressure inch of HgV (Torr)	System BTU/Hr	db(A) per Pump	System Weight (lb)	System FLA			
										208V	230V	380V	460V
LVHS06D-200V-D	50	6.4	113	86	N/A	25.5 (112)	26,060	79	2,904	N/A	N/A	22	N/A
LVHS06D-200V-D	60	6.4	135	104	N/A	25.5 (112)	26,060	79	2,904	42.6	37.4	N/A	18.2
LVHS07D-200V-D	50	7.5	138	108	N/A	24 (150)	30,540	79	2,916	N/A	N/A	27	N/A
LVHS07D-200V-D	60	7.5	165	130	N/A	24 (150)	30,540	79	2,916	53.4	45.8	N/A	22.4
LVHS08D-200V-D	50	8.7	167	128	N/A	24 (150)	35,426	82	2,992	N/A	N/A	31.4	N/A
LVHS08D-200V-D	60	8.7	200	154	N/A	24 (150)	35,426	82	2,992	60.2	53	N/A	26

Notes:
1. Normal operating conditions at a maximum ambient of (41°C) 105° F. Consult factory for higher ambient conditions.
2. Capacity measured at reference conditions of absolute inlet pressure 1 bar (14.5 psi), intake air temperature 20°C (68° F). System capacities include two pumps running.

BeaconMedæs
1059 Paragon Way
Rock Hill, SC 29730
Phone: (803) 817-5600
Fax: (803) 817-5750
www.beaconmedaes.com

CERTIFIED ISO 13485
CERTIFIED ISO 14001
CERTIFIED OHSAS 18001