LifeLine® "Oil-Less" O_2 Assured Claw Medical Vacuum Base Mount Modular Triplex System with Variable Speed Drive (5.4 HP)

SPECIFICATION

Modular System Design

The LifeLine® Oil-Less Claw Medical vacuum package is fully compliant with NFPA 99. Each pump module has a common intake connection point and a common discharge connection point. Each module can fit through standard 34.5" doorway. Designed and manufactured with ISO 13485 processes, each system is completely tested before shipment and includes:

- Three "oil-less" O_2 Assured claw rotary vacuum pumps with three motors
- Integral pre-wired control panel with variable speed drive inverter
- Vertical air receiver with full-size three-valve bypass system sized for appropriate demand

Vacuum Pump

Each pump is a direct driven, non-contacting claw type, capable of operating continuous duty at 27" Hg (sea level).

The pumping chamber is oil free. The pump is completely air-cooled with no water requirements. Each pump contains:

- 5 micron inlet air filter
- Vacuum relief valve
- Check valve to prevent backflow through off-cycle units
- Flexible connector and isolation valve
- High discharge temperature sensor
- Oil drain valve and oil sight glass

Vacuum Pump Motor

Motors are continuous duty, C-face, TEFC, 3450 RPM, suitable for 380V, 50 hertz, 3-phase electrical service.

Intake Piping

Each vacuum pump has a factory piped intake with integral flex connector, isolation valve, and check valve. Interconnecting piping consists of powder-coated steel tubing and flanges.

Vacuum Receiver

The vacuum receiver is ASME Code stamped, and rated for a minimum 150 PSIG design pressure.

The receiver has a full-size three-valve bypass system to allow for draining of the receiver without interrupting the vacuum service. A manual drain is provided on the receiver.

Exhaust Piping

Each vacuum pump module is factory piped to an exhaust manifold with integral flex connector and drip leg with ball valve and condensate drain. Interconnecting piping consists of powder-coated steel tubing and flanges. An exhaust muffler is shipped loose.

TotalAlert Embedded Control System

The triplex mounted and wired TotalAlert Embedded control system is U.L. labeled. The control system provides automatic lead/lag sequencing and automatic alternation of vacuum pumps based on first-on/first-off principle with provision for simultaneous operation if required. Automatic activation of reserve unit, if required, will activate an audible alarm as well as a visual alarm on the display screen.

Additional components include:

- NEMA 12 control panel enclosure
- Single variable speed drive
- Circuit breaker disconnects for each motor with external operators
- Full voltage motor starters with overload protection
- 24V control circuit

The touch screen controls feature one 5.7" master screen and a 3.5" operating screen for each vacuum pump. Screen displays and functions include:

- Service alerts, runtime hourmeters for each pump, system status, system vacuum level
- Visual/audible alarm indications with isolated contacts for all standard remote alarms
- Event log recording alarms and system activity
- Event log recording service warnings and service history
- Trend graphs for vacuum level, pump operations, VSD motor speed, and ambient temperature
- Ethernet connectivity and embedded web page for remote monitoring
- Electronic notifications of alarms and warnings
- Integral connectivity to the TotalAlert medical gas network via Ethernet

Oxygen Compatibility

The O_2 Assured vacuum pump is assembled and tested in a clean room with dedicated tools. All parts in contact with the flow stream, gear casing, and bearing surfaces are cleaned with oxygen compatible cleaner. The lubricant in the gear casing as well as the grease used to lubricate the bearings is a special oxygen compatible formula.

- Safe for all WAGD applications.
- Each vacuum pump is capable of operating safely with up to 60% oxygen content in the compression chamber.

The inlet filter is constructed of a fiberglass media to insure there is no fuel to ignite in the compression chamber.

Installation

The installation of this vacuum technology is limited to a maximum of 6,000 feet elevation above sea level.

For installation of this equipment above this elevation, please contact the factory.

Standard Configuration

5.4 HP Triplex - 50 Hz

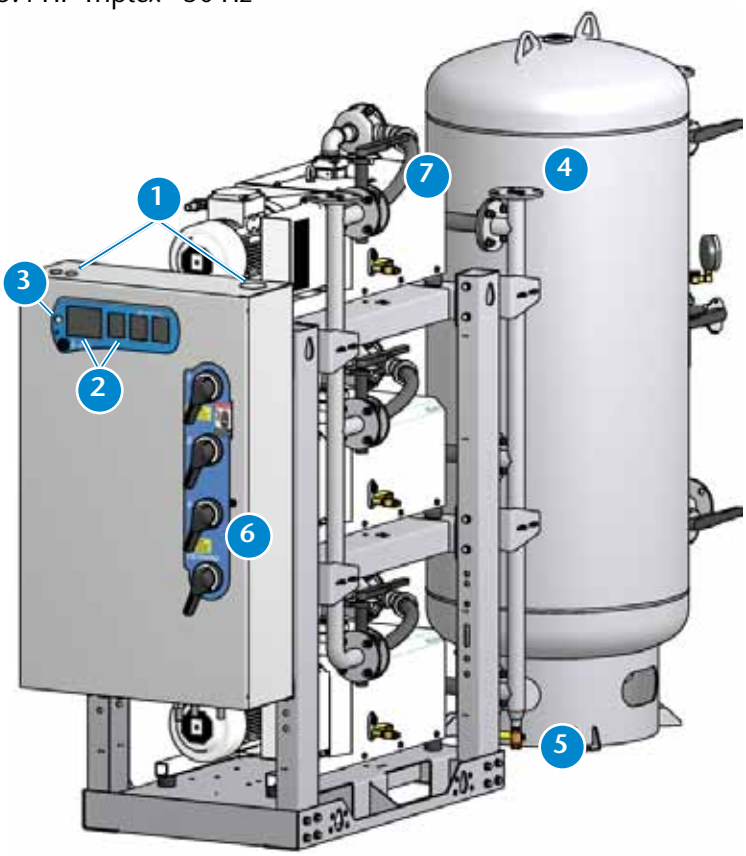

1. *Control panel pre-drilled for power, alarms, and Ethernet connections for easy electrical installation.*
2. *TotalAlert Embedded touch screen controls featuring 5.7" master screen and (3) 3.5" operating screens with exceptional clarity and visibility.*
3. *Motion sensor to activate touch screen displays, preserving screen life.*
4. *Discharge manifold with a single point connection to the exhaust piping, with flex hoses factory installed.*
5. *Factory installed exhaust drip leg with ball valve and condensate drain.*
6. *Through the door disconnects for pumps and VSD inverter add to safety during service.*
7. *Flex connectors on vacuum inlet and discharge to isolate pump vibration from facility pipeline.*

8. *Hospital connection and receiver inlet positioned below receiver exit and piping to the pumps - extra protection against liquids/debris entering pumps.*
9. *Full-size 3-valve receiver bypass with flanged valves reduce potential leak points over NPT fittings.*
10. *Vacuum switch as backup to vacuum transducer. In case of transducer failure, system operates effectively.*
11. *Flanges reduce piping connection time between modules.*
12. *Openings in base frame to allow access underneath pumps for pump maintenance.*
13. *Individual 5 micron air inlet filter per vacuum pump to protect pump from incoming particulates.*

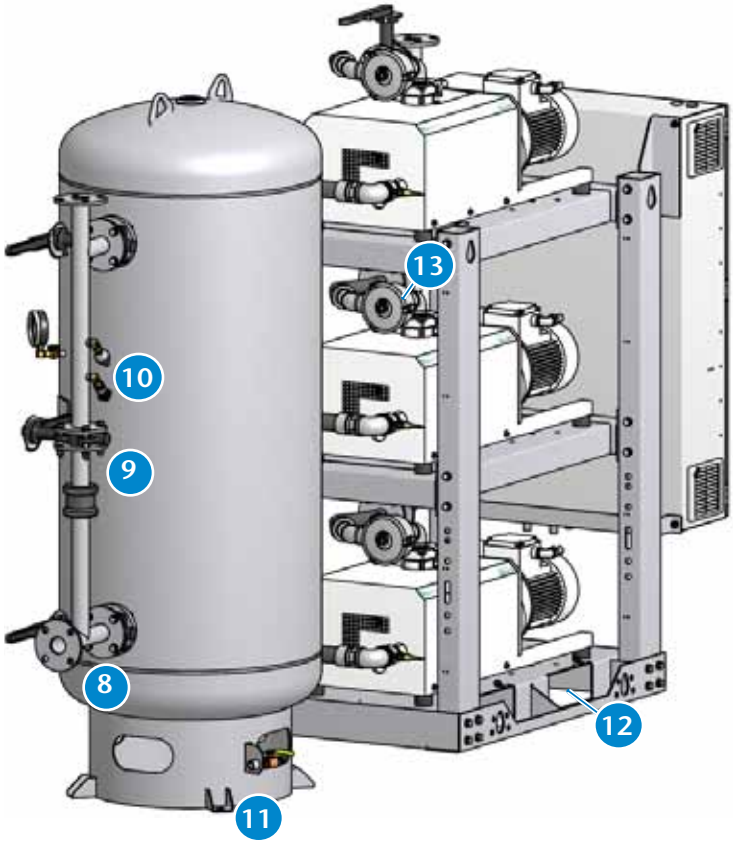

TotalAlert Embedded Control System

Touch Screen Control

- Master screen is 5.7" high resolution LCD with 640x480 pixel display and Unit screens are 3.5" high resolution LCD wtih 240x320 pixel display for exceptional clarity and visibility
- Toolbars on all screens with easy access navigation icons that enable full access with minimal touches
- Passive InfraRed (PIR) motion sensor activates screen display (under alarm conditions screen is active continuously)

Ethernet Connectivity with Embedded Web Page

- Built-in web server allows remote operator to view system controls and display information
- Ethernet communication compatible with TotalAlert and TotalAlert² alarm systems
- Web page provided to show links to other devices on the TotalAlert Embedded network, including alarms and other source equipment
- Electronic notification
  - » Accessible through any SMTP gateway
  - » Allows for remote alerts of alarm and warning conditions
  - » Allows for remote alerts of routine maintenance
- All printed circuit boards have an Ethernet port that allows reprogramming with a standard computer for software updates
- Dual Ethernet configuration with separate Ethernet subnets to separate the facility Ethernet from internal TotalAlert Embedded communications

Control Cabinet Safety

- Volt free relay contacts for all standard alarms
- Low voltage (24V) control circuit
- Full voltage motor starters with overload protection
- Circuit breaker disconnects for each vacuum pump
- Backup vacuum switch
- In case of power failure at source, all remote alarm contacts open in alarm condition.

Redundancy

- In unlikely event of display boards or displays becoming disabled, unit will function normally and activate alarm
- If master board is disabled, system goes to failsafe operation with backup pressure switch
- Each vacuum pump has independent board for control allowing unit to function independently

Master Display Screen (5.7")

- Main Screen
  - » Displays the system operating conditions, including Vacuum level and VSD motor speed
  - » Displays the vacuum pump sequence, including status of all pumps (running, available, off) and next to start
- Trends & Graphs
  - » Shows measured values of the system operating conditions over a period of time (vacuum level, VSD/pump operations, ambient temperature)
  - » Selectable time periods consist of 60 min, 4 hrs, 24 hrs, and 6 days
- Service
  - » Displays ambient temperature in the room and within the control cabinet
  - » Maintenance screen shows suggested and required maintenance items with resettable timers
  - » Historical event log records all service activities
- Alarms and Shutdowns
  - » All System Alarms and Shutdowns displayed with visual indication (Green or Red)
  - » Testing mode enables operator to test all alarm events (password protected)
  - » Event History Log records all system event history excluding service/maintenance history
- System Settings
  - » Allows the adjustment of system vacuum operating range (password protected)
  - » Displays pertinent system model information

Unit Screens (3.5") - One per Vacuum Pump

- Main Screen shows the operation mode of the unit along with the automatic or manual mode setting
- Unit status screen displays the running hour meter values
- Pump rotation allows the unit to run for a short period to check pump rotation
- All Unit Alarms and Shutdowns displayed with visual indication (Green or Red)
- Audible indication for unit Shutdown Alarms
- Testing mode enables operator to test all shutdown events (password protected)

Standard Configuration

5.4 Hp Triplex - 50 Hz

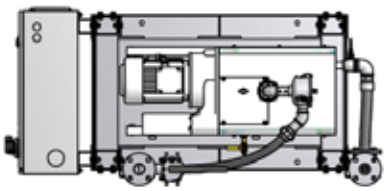

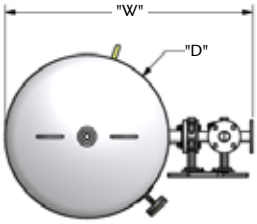

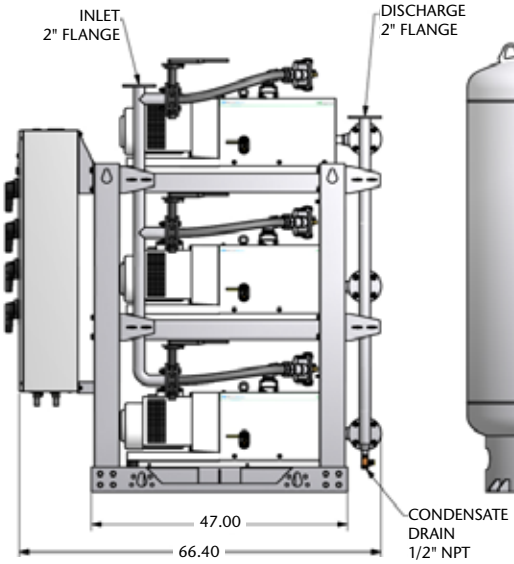

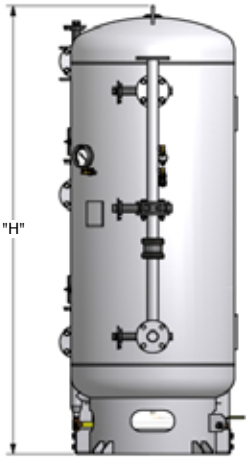

Notes:
- Discharge muffler ships loose
- Allow 36 inches in front of control panel for maintenance and ventilation, all other sides require 24 inches of clearance.
- Additional drawings/diagrams available for download at www.beaconmedaes.com.

Vacuum System Specifications[1]

System Model No.	HP	Capacity[2] @19" Hg (scfm) Pump	Capacity[2] @19" Hg (scfm) System	System[3] BTU/HR	Receiver (gallons)	Noise[4] Level	System FLA 380V	System Weight (lbs.) Vacuum Module[5]	System Weight (lbs.) Receiver Module	Dimensions (in.) H	Dimensions (in.) D	Dimensions (in.) W
VAM05T-120V-T_V	5.4	32.0	64.0	21,989	120	82	27.9	2,005	393	78.9	24	40.4
VAM05T-200V-T_V	5.4	32.0	64.0	21,989	200	82	27.9	2,005	618	82.1	30	45.4
VAM05T-240V-T_V	5.4	32.0	64.0	21,989	240	82	27.9	2,005	693	94.1	30	45.4

Notes:
1. Normal operating conditions at a maximum ambient of 105° F. Consult factory for higher ambient conditions.
2. All capacities are shown as NFPA system capacities (reserve vacuum pump on standby).
3. All system BTU/HR are shown with reserve vacuum pump on standby.
4. All noise levels are shown in dB(A) and reflect reserve pump on standby.
5. Total weight for a triplex module with triplex control panel.
6. Medical Vacuum System is not to be used in non-medical laboratory applications.

BeaconMedæs
1800 Overview Drive
Rock Hill, SC 29730
Phone: (803) 817-5600
Fax: (803) 817-5750
www.beaconmedaes.com